Hikrobot Co., Ltd.

SC1000(P) Series Vision Sensor

Quick Start Guide

HIKROBOT

Legal Information

© Hangzhou Hikrobot Co., Ltd. All rights reserved.

About this Document

This Document includes instructions for using and managing the Product. Pictures, charts, images and all other information hereinafter are for description and explanation only. The information contained in the Document is subject to change, without notice, due to firmware updates or other reasons. Please find the latest version in the company website (***https://en.hikrobotics.com/***). Unless otherwise agreed, Hangzhou Hikrobot Co., Ltd. or its affiliates (hereinafter referred to as “Hikrobot”) makes no warranties, express or implied. Please use the Document with the guidance and assistance of professionals trained in supporting the Product.

Acknowledgment of Intellectual Property Rights

- Hikrobot owns the copyrights and/or patents related to the technology embodied in the Products described in this Document, which may include licenses obtained from third parties. Any part of the Document, including text, pictures, graphics, etc., belongs to Hikrobot. No part of this Document may be excerpted, copied, translated, or modified in whole or in part by any means without written permission.
- ***HIKROBOT*** and other Hikrobot's trademarks and logos are the properties of Hikrobot in various jurisdictions. Other trademarks and logos mentioned are the properties of their respective owners.

LEGAL DISCLAIMER

TO THE MAXIMUM EXTENT PERMITTED BY APPLICABLE LAW, THIS MANUAL AND THE PRODUCT DESCRIBED, WITH ITS HARDWARE, SOFTWARE AND FIRMWARE, ARE PROVIDED "AS IS" AND "WITH ALL FAULTS AND ERRORS". HIKROBOT MAKES NO WARRANTIES, EXPRESS OR IMPLIED, INCLUDING WITHOUT LIMITATION, MERCHANTABILITY, SATISFACTORY QUALITY, OR FITNESS FOR A PARTICULAR PURPOSE. THE USE OF THE PRODUCT BY YOU IS AT YOUR OWN RISK. IN NO EVENT WILL HIKROBOT BE LIABLE TO YOU FOR ANY SPECIAL, CONSEQUENTIAL, INCIDENTAL, OR INDIRECT DAMAGES, INCLUDING, AMONG OTHERS, DAMAGES FOR LOSS OF BUSINESS PROFITS, BUSINESS INTERRUPTION, OR LOSS OF DATA, CORRUPTION OF SYSTEMS, OR LOSS OF DOCUMENTATION, WHETHER BASED ON BREACH OF CONTRACT, TORT (INCLUDING NEGLIGENCE), PRODUCT LIABILITY, OR OTHERWISE, IN CONNECTION WITH THE USE OF THE PRODUCT, EVEN IF HIKROBOT HAS BEEN ADVISED OF THE POSSIBILITY OF SUCH DAMAGES OR LOSS.

YOU ACKNOWLEDGE THAT THE NATURE OF INTERNET PROVIDES FOR INHERENT SECURITY RISKS, AND HIKROBOT SHALL NOT TAKE ANY RESPONSIBILITIES FOR ABNORMAL OPERATION, PRIVACY LEAKAGE OR OTHER DAMAGES RESULTING FROM

CYBER-ATTACK, HACKER ATTACK, VIRUS INFECTION, OR OTHER INTERNET SECURITY RISKS; HOWEVER, HIKROBOT WILL PROVIDE TIMELY TECHNICAL SUPPORT IF REQUIRED. YOU AGREE TO USE THIS PRODUCT IN COMPLIANCE WITH ALL APPLICABLE LAWS, AND YOU ARE SOLELY RESPONSIBLE FOR ENSURING THAT YOUR USE CONFORMS TO THE APPLICABLE LAW. ESPECIALLY, YOU ARE RESPONSIBLE, FOR USING THIS PRODUCT IN A MANNER THAT DOES NOT INFRINGE ON THE RIGHTS OF THIRD PARTIES, INCLUDING WITHOUT LIMITATION, RIGHTS OF PUBLICITY, INTELLECTUAL PROPERTY RIGHTS, OR DATA PROTECTION AND OTHER PRIVACY RIGHTS. YOU SHALL NOT USE THIS PRODUCT FOR ANY PROHIBITED END-USES, INCLUDING THE DEVELOPMENT OR PRODUCTION OF WEAPONS OF MASS DESTRUCTION, THE DEVELOPMENT OR PRODUCTION OF CHEMICAL OR BIOLOGICAL WEAPONS, ANY ACTIVITIES IN THE CONTEXT RELATED TO ANY NUCLEAR EXPLOSIVE OR UNSAFE NUCLEAR FUEL-CYCLE, OR IN SUPPORT OF HUMAN RIGHTS ABUSES.

THE PERFORMANCE DATA IN THIS PUBLICATION IS BASED ON HIKROBOT'S INTERNAL RESEARCH/EVALUATION. ACTUAL DATA MAY VARY DEPENDING ON SPECIFIC CONFIGURATIONS AND OPERATING CONDITIONS AND HIKROBOT SHALL NOT BEAR THE CONSEQUENCES ARISING THEREFROM.

IN THE EVENT OF ANY CONFLICTS BETWEEN THIS MANUAL AND THE APPLICABLE LAW, THE LATTER PREVAILS.

Regulatory Information

Note

- These clauses apply only to the products bearing the corresponding mark or information.
- Due to the product shape and dimension, the name and address of the importer/manufacturer are printed on the package.

EU Conformity Statement

CE

This product and - if applicable - the supplied accessories too are marked with "CE" and comply therefore with the applicable harmonized European standards listed under the Directive 2014/30/EU(EMCD),Directive 2001/95/EC(GPSD) and Directive 2011/65/EU(RoHS).



2012/19/EU (WEEE directive): Products marked with this symbol cannot be disposed of as unsorted municipal waste in the European Union. For proper recycling, return this product to your local supplier upon the purchase of equivalent new equipment, or dispose of it at designated collection points. For more information see: http://www.recyclethis.info



Regulation (EU) 2023/1542(Battery Regulation): This product contains a battery and it is in conformity with the Regulation (EU) 2023/1542. The battery cannot be disposed of as unsorted municipal waste in the European Union. See the product documentation for specific battery information. The battery is marked with this symbol, which may include lettering to indicate cadmium (Cd), or lead (Pb). For proper recycling, return the battery to your supplier or to a designated collection point. For more information see: www.recyclethis.info.

KC Mark Certification

Class A: The device is advised to note that as a seller or a business user (Class A) Devices and intended for use outside the Home area.

A급 기기: 이 기기는 업무용(A급) 전자파적합기기로써 판매자 또는 사용자는 이 점을 주의하시기바라며, 가정 외의 지역에서 사용하는 것을 목적으로 합니다.

Symbol Conventions

The symbols that may be found in this document are defined as follows.

Symbol	Description
Danger	Indicates a hazard with a high level of risk, which if not avoided, will result in death or serious injury.
Caution	Indicates a potentially hazardous situation which, if not avoided, could result in equipment damage, data loss, performance degradation, or unexpected results.
Note	Provides additional information to emphasize or supplement important points of the main text.

Available Model

This manual is applicable to the SC1000 and SC1000P Series Vision Sensors.

Contact Information

Hangzhou Hikrobot Co., Ltd.
E-mail: global.support@hikrobotics.com
Website: ***https://en.hikrobotics.com/***

Contents

Chapter 1 Safety Instruction 1
1.1 Safety Claim 1
1.2 Safety Instruction 1
1.3 Electromagnetic Interference Prevention 3
1.4 Laser Product 4
Chapter 2 Overview 5
2.1 Introduction 5
2.2 Key Feature 5
Chapter 3 Appearance 6
Chapter 4 Connector and Indicator 8
4.1 Pin Definitions 8
4.1.1 6-Pin Connector 8
4.1.2 10-Pin Connector 8
4.2 Indicator 9
Chapter 5 Installation 12
5.1 Installation Preparation 12
5.2 Install Device 12
5.3 Device Wiring 12
Chapter 6 I/O and Serial Port 14
6.1 I/O Electrical Feature 14
6.1.1 Non-Isolated Input 14
6.1.2 Non-Isolated Output 15
6.1.3 Opto-Isolated Input Signal 16
6.1.4 Opto-Isolated Output Signal 17
6.2 Input Signal Wiring 18
6.2.1 Input Signal from PNP Device 18
6.2.2 Input Signal from NPN Device 19
6.2.3 Input Signal from Switch 20
6.3 Output Signal Wiring 20
6.3.1 PNP Device as External Device 20
6.3.2 NPN Device as External Device 21
6.4 RS-232 Serial Port 22

Chapter 7 Device Connection 24
7.1 Set PC Network 24
7.2 Install Client Software 25
7.3 Set Device Network 26
7.4 Log In 27
Chapter 8 Client Layout and Operation Flow 28
8.1 Main Window Introduction 28
8.2 Operation Flow 29
Chapter 9 FAQ (Frequently Asked Question) 31
9.1 Why there is no device listed after I run the client software? 31
9.2 Why the image is very dark? 31
9.3 Why the image's frame rate is very low in the live view? 31
9.4 Why there is no image in the live view? 32

Chapter 1 Safety Instruction

The safety instructions are intended to ensure that the user can use the device correctly to avoid danger or property loss. Read and follow these safety instructions before installing, operating and maintaining the device.

1.1 Safety Claim

- To ensure personal and device safety, when installing, operating, and maintaining the device, follow the signs on the device and all safety instructions described in the manual.
- The note, caution and danger items in the manual do not represent all the safety instructions that should be observed, but only serve as a supplement to all the safety instructions.
- The device should be used in an environment that meets the design specifications, otherwise it may cause malfunctions, and malfunctions or component damage caused by non-compliance with relevant regulations are not within the scope of the device's quality assurance.
- Our company will not bear any legal responsibility for personal safety accidents and property losses caused by abnormal operation of the device.

1.2 Safety Instruction

⚠Caution

- Do not install the device if it is found that the device and accessories are damaged, rusted, water ingress, model mismatch, missing parts, etc., when unpacking.
- Avoid storage and transportation in places such as water splashing and rain, direct sunlight, strong electric fields, strong magnetic fields, and strong vibrations.
- Avoid dropping, smashing or vigorously vibrating the device and its components.
- It is forbidden to install the indoor device in an environment where it may be exposed to water or other liquids. If the device is damp, it may cause fire and electric shock hazard.
- Place the device in a place out of direct sunlight and ventilation, away from heat sources such as heaters and radiators.
- In the use of the device, you must be in strict compliance with the electrical safety regulations of the nation and region.
- Use the power adapter provided by the official manufacturer. The power adapter must meet the Limited Power Source (LPS) requirements. For specific requirements, please refer to the device's technical specifications.
- It is strictly forbidden to wire, maintain, and disassemble the device is powered on. Otherwise, there is a danger of electric shock.
- Before powering on the device, please confirm that the device is installed in good condition, the wiring is firm, and the power supply meets the requirements.

- Looking directly at the device may cause harm to the eyes. Protective measures like wearing protective glasses should be taken in the process of installation, maintenance and debugging.
- If the device emits smoke, odor or noise, please turn off the power and unplug the power cord immediately, and contact the dealer or service center in time.
- It is strictly forbidden to touch any terminal of the device when operating it. Otherwise there is a danger of electric shock.
- It is strictly forbidden for non-professional technicians to detect signals during device operation, otherwise it may cause personal injury or device damage.
- Avoid aiming the image sensor at strong light (such as laser beams), otherwise the image sensor will be damaged.
- Keep clean of the device's image acquisition window. It is recommended to use cleaning water (not the alcohol-based corrosive solutions) to wipe off the dust. When the device is not in use, please add a dust cover to protect the image acquisition window.
- If the device does not work properly, please contact your dealer or the nearest service center. Never attempt to disassemble the device yourself. We shall not assume any responsibility for problems caused by unauthorized repair or maintenance.
- Please dispose of the device in strict accordance with the relevant national or regional regulations and standards to avoid environmental pollution and property damage.

Note

- Check whether the device's package is in good condition, whether there is damage, intrusion, moisture, deformation, etc. before unpacking.
- Check the surface of the device and accessories for damage, rust, bumps, etc. when unpacking.
- Check whether the quantity and information of the device and accessories are complete after unpacking.
- Store and transport the device according to the storage and transport conditions of the device, and the storage temperature and humidity should meet the requirements.
- It is strictly prohibited to transport the device in combination with items that may affect or damage the device.
- Quality requirements for installation and maintenance personnel:
  - Qualification certificate or working experience in weak current system installation and maintenance, and relevant working experience and qualifications. Besides, the personnel must possess the following knowledge and operation skills.
  - The basic knowledge and operation skills of low voltage wiring and low voltage electronic circuit connection.
  - The ability to comprehend the contents of this manual.
- Please read the manual and safety instructions carefully before installing the device.
- Do not contact the device with strong acids, alkalis, oils, greases or organic solutions such as thinners.
- Do not expose the device directly to flashlights, high-frequency switch lighting devices, or to sunlight, which may affect the performance.
- Do not impose pressure on the cable end of the device, such as forced bending, pulling.

1.3 Electromagnetic Interference Prevention

- Make sure that the shielding layer of cables is intact and 360° connected to the metal connector when using shielded cables.
- Do not route the device together with other equipment (especially servo motors, high-power devices, etc.), and control the distance between cables to more than 10 cm. Make sure to shield the cables if unavoidable.
- The control cable of the device and the power cable of the industrial light source must be wired separately to avoid bundled wiring.
- The power cable, data cable, signal cable, etc. of the device must be wired separately. Make sure to ground them if the wiring groove is used to separate the wiring and the wiring groove is metal.
- During the wiring process, evaluate the wiring space reasonably, and do not pull the cables hard, so as not to damage the electrical performance of the cables.
- If the device is powered on and off frequently, it is necessary to strengthen the voltage isolation, and consider adding a DC/DC isolation power supply module between the device and the adapter.
- Use the power adapter to supply power to the device separately. If centralized power supply is necessary, make sure to use a DC filter to filter the power supply of the device separately before use.
- The unused cables of the device must be insulated.
- When installing the device, if you cannot ensure that the device itself and all equipment connected to the device are well grounded, you should isolate the device with an insulating bracket.
- To avoid the accumulation of static electricity, ensure that other equipment (such as machines, internal components, etc.) and metal brackets on site are properly grounded.
- Make sure that the connector metal barrier of the device is well connected to the PC and other chassis, and if necessary, copper foil should be used to enhance the grounding effect.
- During the installation and use of the device, high voltage leakage must be avoided.
- Use a figure-eight bundle method if the device cable is too long.
- When connecting the device and metal accessories, they must be connected firmly to maintain good conductivity.
- Use a shielded network cable to connect to the device. If you use a self-made network cable, make sure that the shielding shell at the aviation head is well connected to the aluminum foil or metal braid of the shielding cable.

1.4 Laser Product

SC1000 device(s) with 0.8 MP and SC1000P device(s) with 1.3 MP comply with IEC60825.1:2014 and GB7247.1:2012, and its laser safety class belongs to class 2.

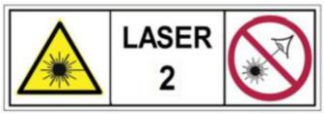

Other parameters regarding the laser information are as follows:

- Wavelength: 650 nm
- Beam Divergence Angle: 14.5° × 14.5°
- Repetitive Frequency: Solid
- Maximum Power: 3.8 mW

⚠Caution

- Do not look directly at the laser beam, and if necessary, adjust the direction of direct eye gaze or close your eyes for protection.
- Do not use optical instruments (such as telescopes, magnifier) to observe the laser beam.
- Do not place optical instruments (such as mirrors) within the irradiation range of the laser beam.
- Avoid shining the laser on highly reflective materials. If it is unavoidable, the angle of the reflective material should be adjusted to prevent damage caused by laser reflection.
- Turn off the laser when the device is not in use.
- Please use this device correctly and safely in accordance with the contents of this manual and the local standards and laws and regulations. Otherwise the operator may be exposed to the risk of injury, electric shock, or radiation from the laser.

Chapter 2 Overview

2.1 Introduction

The vision sensor mentioned in this manual integrates functions of image acquisition, image processing and result output, and is used in machine vision inspection. The device uses image sensors and optical elements to obtain the image of the measured object, realizes the functions of counting, existence, measurement and recognition via the built-in algorithms, and can output the detection results through a variety of communication methods. With the client software, the device can quickly build the project and finish related configurations, and it is easy to use, widely used in the industrial field.

2.2 Key Feature

- Adopts small-size design for all types of machines and compact workstations.
- Adopts embedded hardware platform for high-speed image processing.
- Adopts built-in positioning and measurement algorithms to detect object's existence, quantity, location, etc.
- Integrated aimer to allow the field-of-view to be clearly.
- Provides multiple indicators for displaying device status.
- Supports multiple communication protocols, including Modbus, EtherNet/IP, PROFINET, FTP, UDP, TCP, and Serial Port.

Note

- The specific functions may differ by device models.
- Refer to the device's datasheet for specific parameters.

Chapter 3 Appearance

Note

Appearance here is for reference only. Refer to the device's datasheet for detailed dimension information.

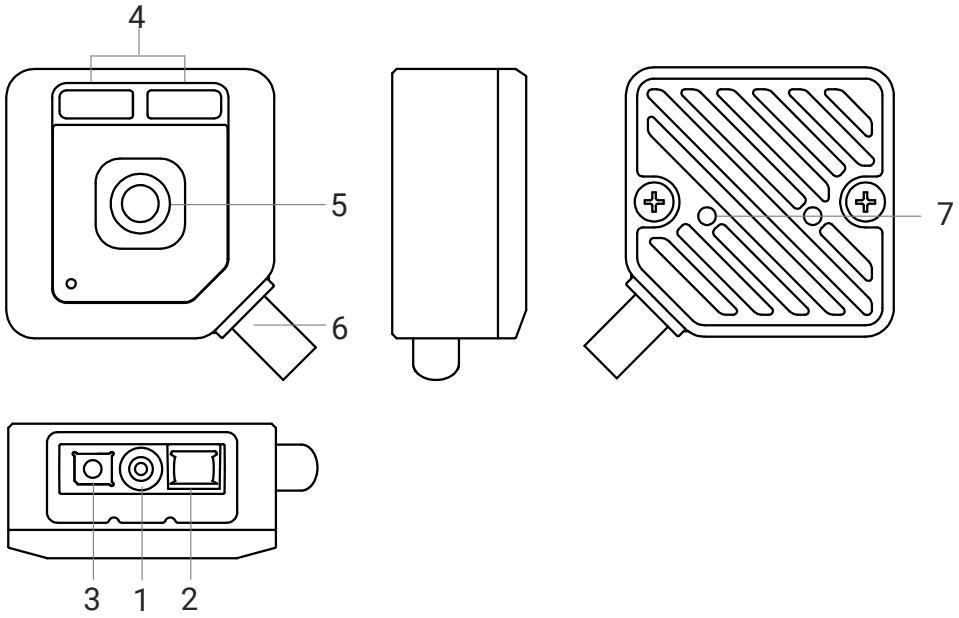

Figure 3-1 Appearance (SC1000 Series)

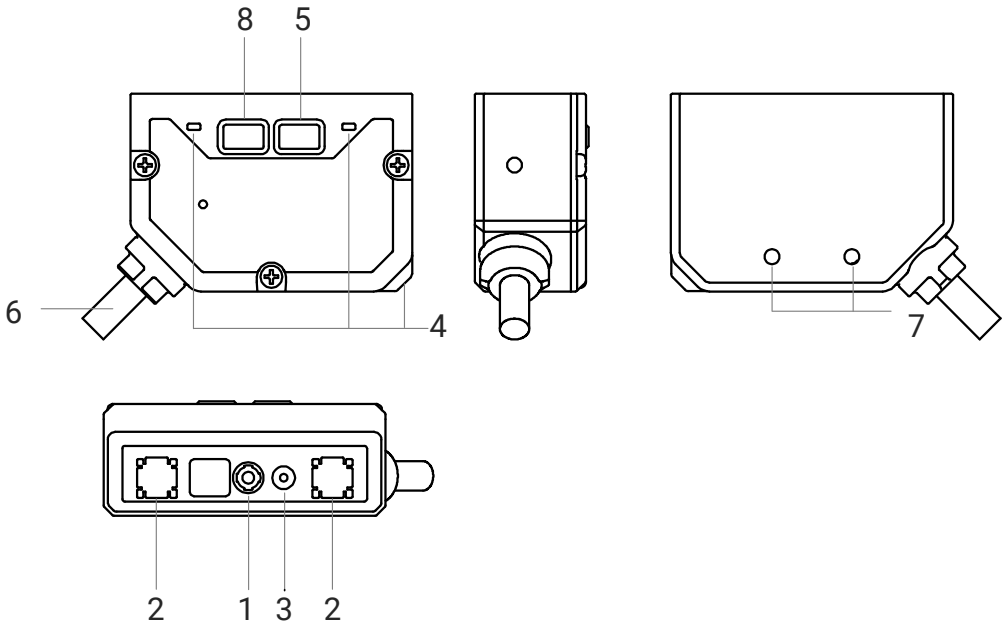

Figure 3-2 Appearance (SC1000P Series)

Table 3-1 Component Description

No.	Name	Description
1	Image Sensor	It is used to acquire images.
2	Light Source	It is the LED light source, which is used to provide light when the device acquires images.
3	Aiming System	It is used to show the field of view and aim targets ● SC1000 series: It is red cross laser (device with 0.8 MP) or orange LED light (device with 0.3 MP). ● SC1000P series: It is red cross laser (device with 1.3 MP) or red LED light (device with 0.3 MP).
4	Indicator	It refers to indicators for observing the device's status. Refer to section ***Indicator*** for details.
5	Trigger Button	It is used to trigger device. When the device is in trigger mode, press the button and the device triggers once.
6	SR Cable	It is used to provide power, digital I/O, and serial port. ● SC1000 series: SR cable includes 6-pin connector and RJ45F interface. ● SC1000P series: SR cable includes 10-pin connector and RJ45F interface.
7	Screw Hole	It is used to fix the device to installation position. You should use M3 screw.
8	Smart Tune Button	It is used to set smart tune mode for the SC1000P device. ● Hold the button for 3 seconds, the device is in smart tune mode. ● Press the button 2 times consecutively during smart tune process, and the device parameters will be configured automatically. ● Press the button 3 times consecutively during smart tune process, and a specified template will be created automatically. ● Hold the button for 3 seconds, and the smart tune mode will be closed.

Chapter 4 Connector and Indicator

4.1 Pin Definitions

4.1.1 6-Pin Connector

SC1000 device provides SR cable with 6-pin connector to provide power, digital I/O, and serial port.. Read the following section to get pin definitions of 6-pin connector.

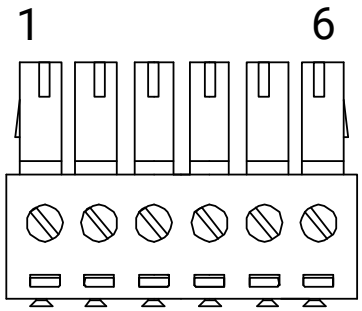

Figure 4-1 6-Pin Connector

Table 4-1 Pin Definitions

No.	Signal	I/O Signal Source	Description	Cable Color
1	IO_IN	LINE0	Non-isolated input	Blue
2	IO_OUT	LINE1	Non-isolated output	Gray
3	RS232_TX	–	RS-232 serial port output	Yellow
4	RS232_RX	–	RS-232 serial port input	White
5	GND	–	Power supply ground	Black
6	VCC	–	Direct current power supply positive	Red

Note

You should refer to the table above and the label attached to the supplied power and I/O cable to wire the device.

4.1.2 10-Pin Connector

SC1000P device provides SR cable with 10-pin connector to provide power, digital I/O, and serial port. Read the following section to get pin definitions of 10-pin connector.

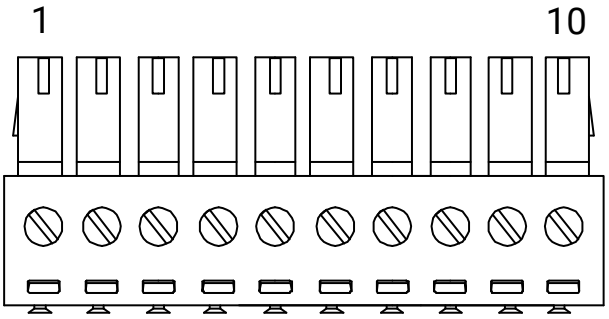

Figure 4-2 10-Pin Connector

Table 4-2 Pin Definitions

No.	Signal	I/O Signal Source	Description	Cable Color
1	IO_IN	LINE0	Opto-isolated input	Gray
2	INCOM	-	Input common port	Yellow
3	OUTPUT0	LINE2	Opto-isolated output	Blue
4	OUTCOM	-	Output common port	Brown
5	INPUT1	LINE1	Non-isolated input	Pink
6	OUTPUT1	LINE3	Non-isolated output	White
7	232_TX	-	RS-232 serial port output	White/Black
8	232_RX	-	RS-232 serial port input	White/Red
9	GND	-	Power supply ground	Black
10	POWER_IN	-	Direct current power supply positive	Red

Note

You should refer to the table above and the label attached to the supplied power and I/O cable to wire the device.

4.2 Indicator

You can observe the device's indictor to check whether the device operates normally or not.

Note

The indicator details vary by device models and device firmware versions. The following descriptions are for reference only, and the actual conditions shall prevail.

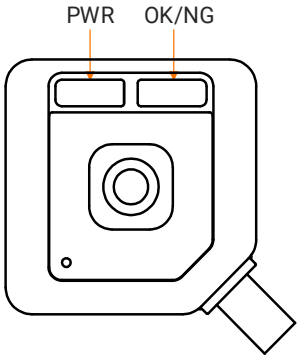

Figure 4-3 Device Indicator (SC1000 Series)

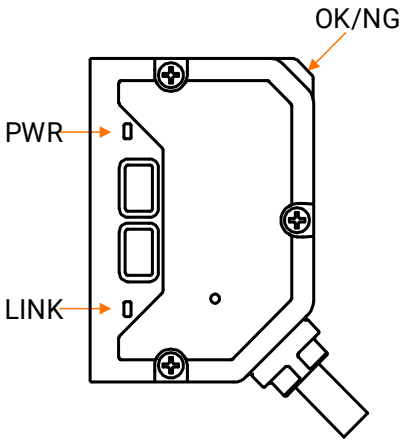

Figure 4-4 Device Indicator (SC1000P Series)

Table 4-3 Indicator Description

Device Status	Description	
	SC1000 Series	SC1000P Series
PWR (Power Indicator)	Solid Green: Power supply is normal.	
	Flashing Red: The indicator flashes once when the device is powered on.	
	Unlit: Device is powered off.	
OK/NG (Result Indicator)	Flashing Green: Solution execution is successful.	
	Flashing Red: Solution execution fails.	
	Flashing Red and Green: Solution is loading...	
	Unlit: The indicator is unlit by default.	

Device Status	Description	
	SC1000 Series	SC1000P Series
LINK (Network Indicator)	Not supported.	Flashing Green: Network connection is normal, and the flashing speed is related to data transmission speed.
		Unlit: Network is disconnected.

Chapter 5 Installation

5.1 Installation Preparation

You need to prepare following accessories before installation. The included accessories are in the device's package, and you can purchase optional accessories according to actual demands.

Table 5-1 Accessories

No.	Name	Quantity	Description
1	SR Cable	1	It refers to the supplied SR cable with device, including 6-pin connector or 10-pin connector to provide power and digital I/O, and RJ45F interface to provide Ethernet.
2	Power Adapter	1	You can select suitable power adapter or switch power supply according to the device power supply and consumption. You need to purchase separately.
3	Network Cable	1	It refers to the category 5 cable (Cat 5) or above. You need to purchase separately.

5.2 Install Device

Before You Start

- Make sure the device in the package is in good condition and all the assembly parts are included.
- Make sure that all the related devices are powered off during the installation.

Steps

1. Select a suitable installation location according to the device's field of view.
2. Use the supplied M3 screws to fix the device to the installation location.

5.3 Device Wiring

After installing the device, you should connect the device to a network cable for image debugging and data communication, and connect the device to a power and I/O cable for power supply.

Steps

1. Use the supplied RJ45F interface to connect the device to a switch or NIC via network cable.
2. Use the supplied 6-pin connector or 10-pin connector to connect the device to a power adapter or switch power supply. Refer to section **Pin Definitions** for more details.

Note

If external device needs to be connected, it can be wired via the other pins of the 6-pin connector or the 10-pin connector.

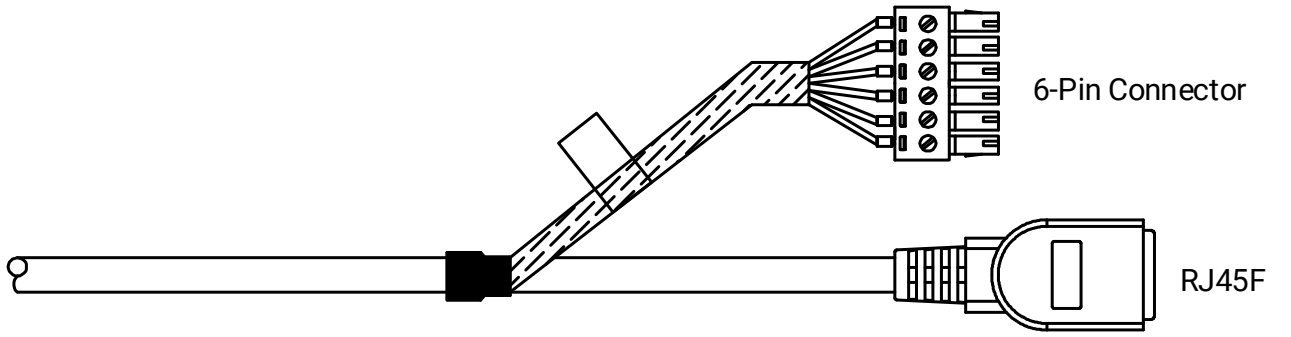

Figure 5-1 Wire Device (SC1000 Series)

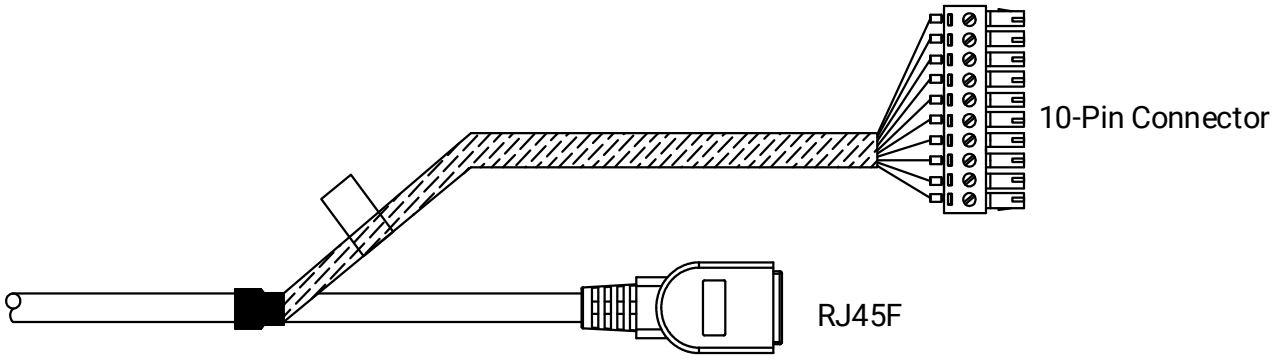

Figure 5-2 Wire Device (SC1000P Series)

Chapter 6 I/O and Serial Port

For SC1000 series devices, the 6-pin connector has one non-isolated input signal (LINE0), one non-isolated output signal (LINE1), and one RS-232 serial port.
For SC1000P series devices, the 10-pin connector has one opto-isolated input (LINE0), one non-isolated input (LINE1), one opto-isolated output (LINE2), one non-isolated output (LINE3), and one RS-232 serial port.

6.1 I/O Electrical Feature

This section introduces the electrical feature of input signal and output signal.

6.1.1 Non-Isolated Input

The device's internal circuit of non-isolated input is shown below.

Note

- The pull-up resistor is 4.7 kΩ.

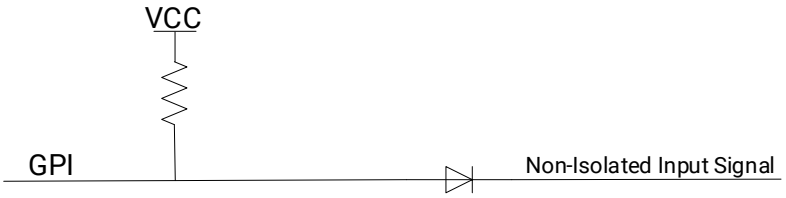

Figure 6-1 Internal Circuit of Non-Isolated Input Signal

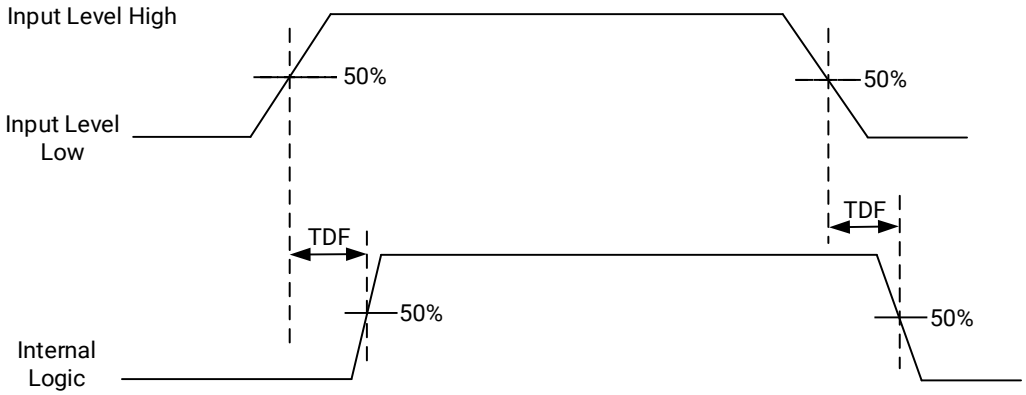

Figure 6-2 Input Logic Level

Table 6-1 Input Electrical Feature

Parameter Name	Symbol	Value
Input Logic Level Low	VL	0.6 V
Input Logic Level High	VH	2 V
Input Falling Delay	TDF	200 ns
Input Rising Delay	TDR	1 μs

6.1.2 Non-Isolated Output

The device's the internal circuit of non-isolated output is shows below.



Figure 6-3 Internal Circuit of Non-Isolated Output Signal

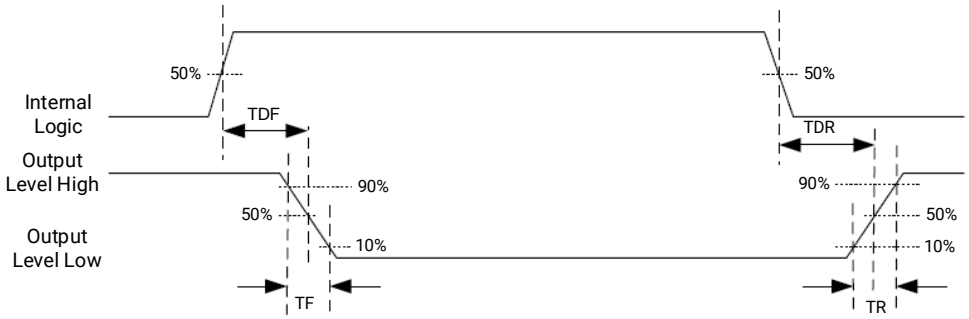

Figure 6-4 Output Logic Level

When the external voltage is 12 V, and the pull-up resistor is 1 kΩ, the output electrical feature is shown below.

Table 6-2 Output Electrical Feature

Parameter Name	Symbol	Value
Output Logic Level Low	VL	550 mV
Output Logic Level High	VH	12 V (external pull-up)
Output Falling Delay	TDF	330 ns
Output Rising Delay	TDR	4.4 μs
Output Falling Time	TF	116 ns
Output Rising Time	TR	3.8 μs

When the external voltage and resistor are different, the parameters of output logic level low are shown below.

Table 6-3 Parameters of Output Logic Level Low

External Voltage	VL
3.3 V	180 mV
5 V	260 mV
12 V	500 mV
24 V	900 mV

6.1.3 Opto-Isolated Input Signal

The device's internal circuit of opto-isolated input is shown below.

Note

- The input voltage ranges from 5 VDC to 30 VDC.
- The breakdown voltage is 36 VDC. Keep voltage stable.

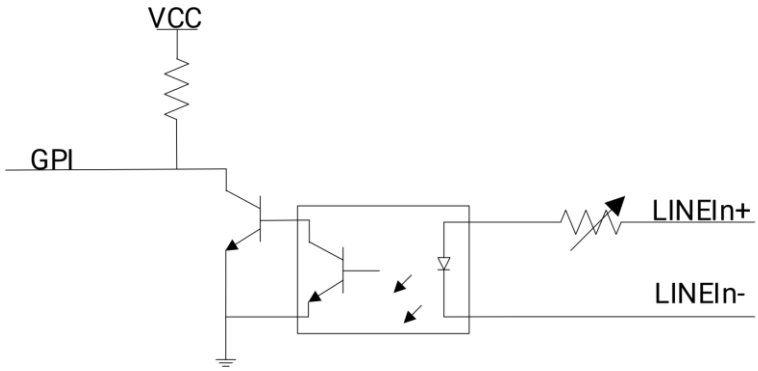

Figure 6-5 Internal Circuit of Opto-Isolated Input Signal

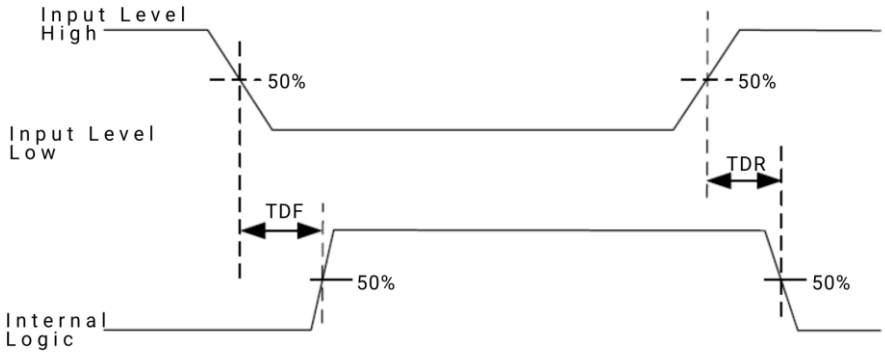

Figure 6-6 Input Logic Level

Table 6-4 Input Electrical Feature

Parameter Name	Symbol	Value
Input Logic Level Low	VL	1.5 VDC
Input Logic Level High	VH	2 VDC
Input Falling Delay	TDF	81.6 μs
Input Rising Delay	TDR	7 μs

6.1.4 Opto-Isolated Output Signal

The device's internal circuit of opto-isolated output is shown below.

Note

- The output voltage ranges from 5 VDC to 30 VDC.
- The maximum output current is 45 mA.
- Do not directly connect with inductive load (e.g. DC motor, etc.) when outputting.
- If the external voltage and resistance change, the corresponding current of output signal and output logic level low may differ.

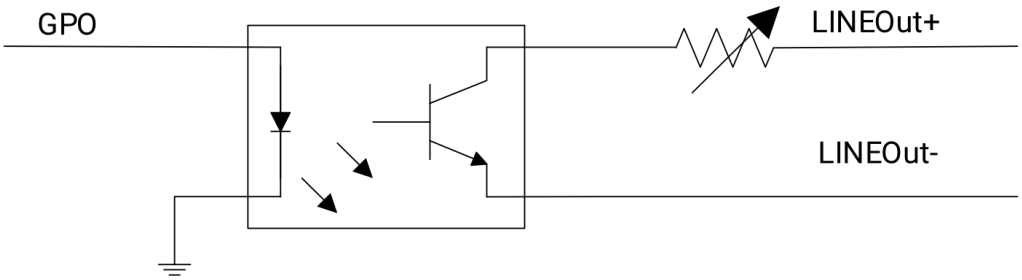

Figure 6-7 Internal Circuit of Opto-Isolated Output Signal

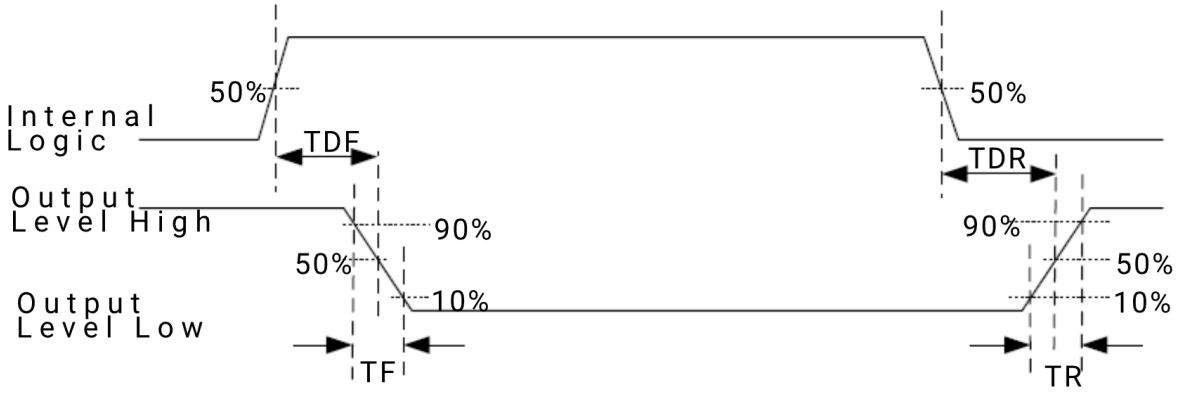

Figure 6-8 Output Logic Level

Table 6-5 Output Electrical Feature

Parameter Name	Symbol	Value
Output Logic Level Low	VL	730 mV
Output Logic Level High	VH	3.2 VDC
Output Falling Delay	TDF	6.3 μs
Output Rising Delay	TDR	68 μs
Output Falling Time	TF	3 μs
Output Rising Time	TR	60 μs

6.2 Input Signal Wiring

Note

Input signal wiring may differ by external device types.

6.2.1 Input Signal from PNP Device

For non-isolated input, the pull-up resistor connected to the device is required. A 1 kΩ pull-up resistor is recommended.

Note

Do not use a pull-up resistor more than 1 kΩ.

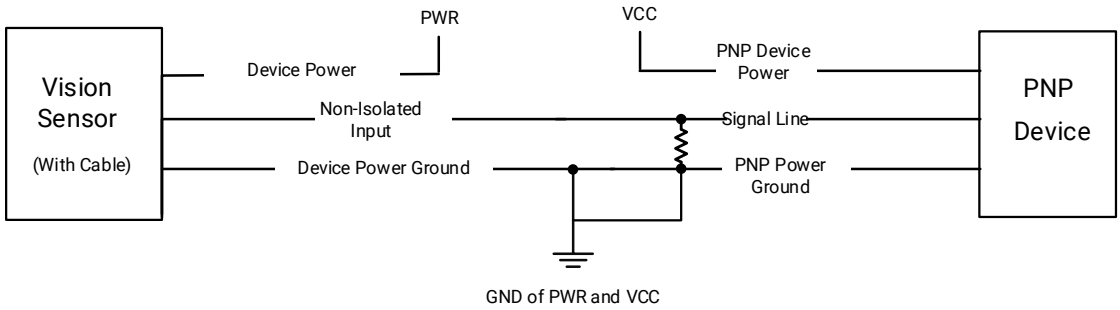

Figure 6-9 Non-Isolated Input Signal Connecting to PNP Device

For opto-isolated input, the pull-up resistor connected to the device is required. A 1 kΩ pull-up resistor is recommended.

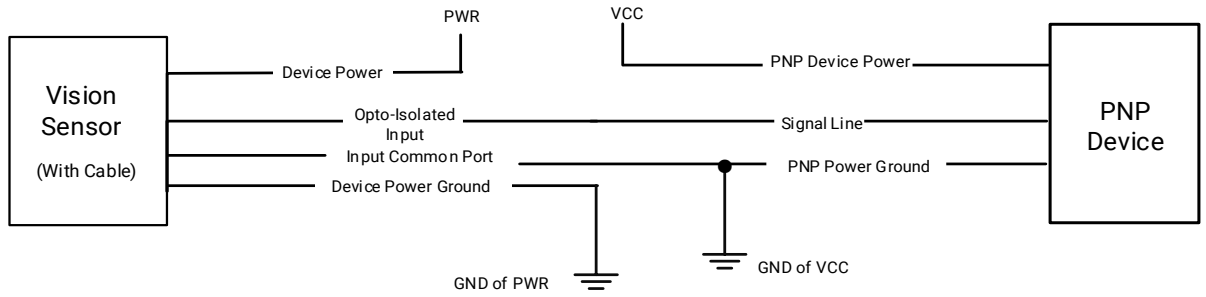

Figure 6-10 Opto-Isolated Input Signal Connecting to PNP Device

6.2.2 Input Signal from NPN Device

For non-isolated input, the pull-up resistor connected to the device is required. A 1 kΩ pull-up resistor is recommended.

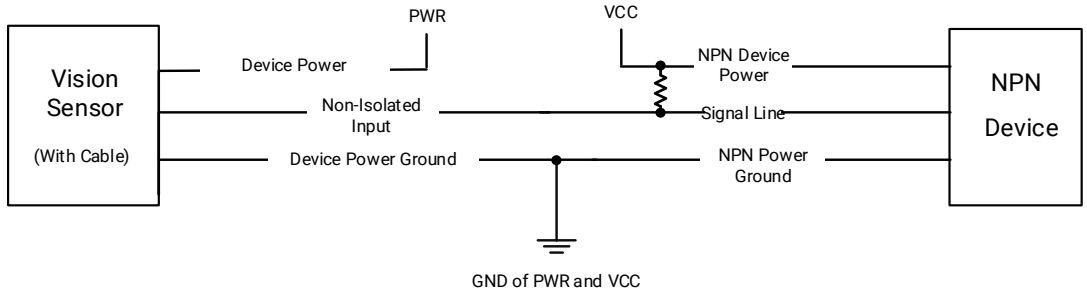

Figure 6-11 Non-Isolated Input Signal Connecting to NPN Device

For opto-isolated input, if the VCC of NPN device is 12 VDC or 24 VDC and pull-up resistor is not used, and its wiring is as follows.

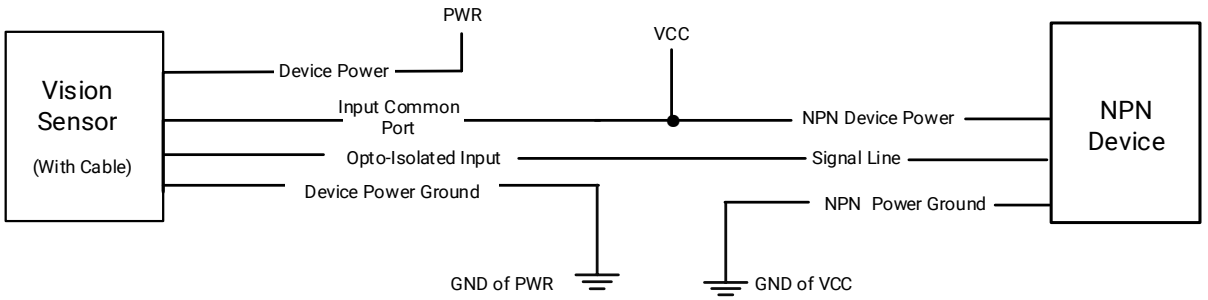

Figure 6-12 Opto-Isolated Input Signal Connecting to NPN Device without Pull-Up Resistor

For opto-isolated input, if the VCC of NPN device is 12 VDC or 24 VDC and 1 KΩ pull-up resistor is used, its wiring is as follows.

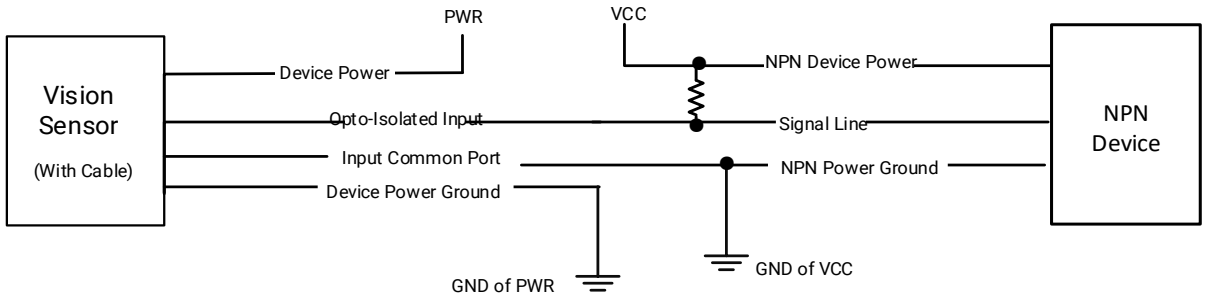

Figure 6-13 Opto-Isolated Input Signal Connecting to NPN Device with Pull-Up Resistor

6.2.3 Input Signal from Switch

For non-isolated input, the switch provides low level for bi-directional I/O triggering.

Note

The voltage of VCC should not higher than that of PWR. Otherwise, the device's output signal may have exception.

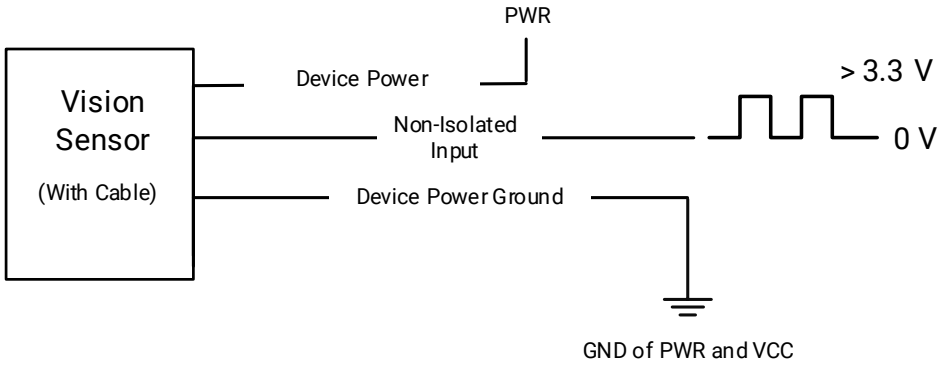

Figure 6-14 Non-Isolated Input Signal Connecting to Switch

6.3 Output Signal Wiring

Note

- Output signal wiring may differ by external device types.
- The voltage of VCC should not higher than that of PWR. Otherwise, the device's output signal may have exception.

6.3.1 PNP Device as External Device

For non-isolated output, its wiring is as follows.

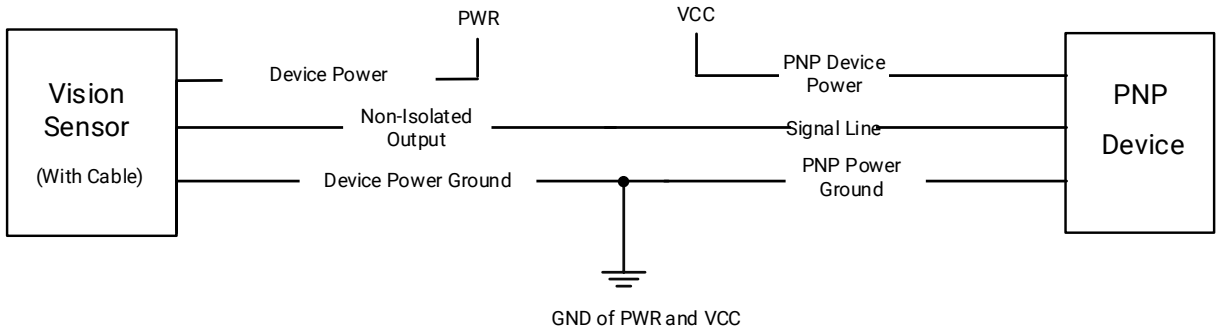

Figure 6-15 Non-Isolated Output Signal Connecting to PNP Device

For opto-isolated output, its wiring is as follows.

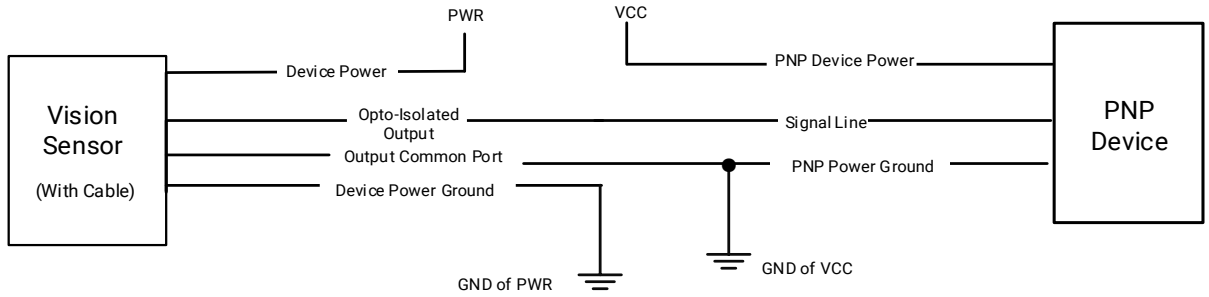

Figure 6-16 Opto-Isolated Output Signal Connecting to PNP Device

6.3.2 NPN Device as External Device

For non-isolated output, the pull-up resistor connected to the device is required. A 1 kΩ pull-up resistor is recommended.

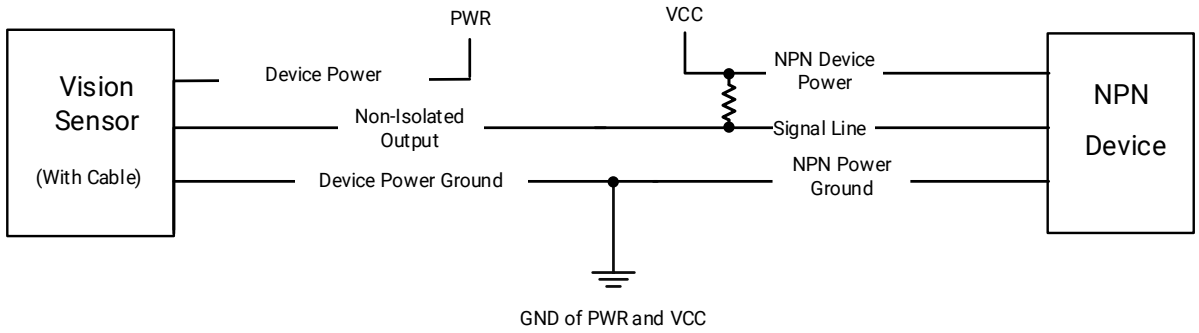

Figure 6-17 Non-Isolated Output Signal Connecting to NPN Device

For opto-isolated output, if the VCC of NPN device is 12 VDC or 24 VDC and pull-up resistor is not used, its wiring is as follows.

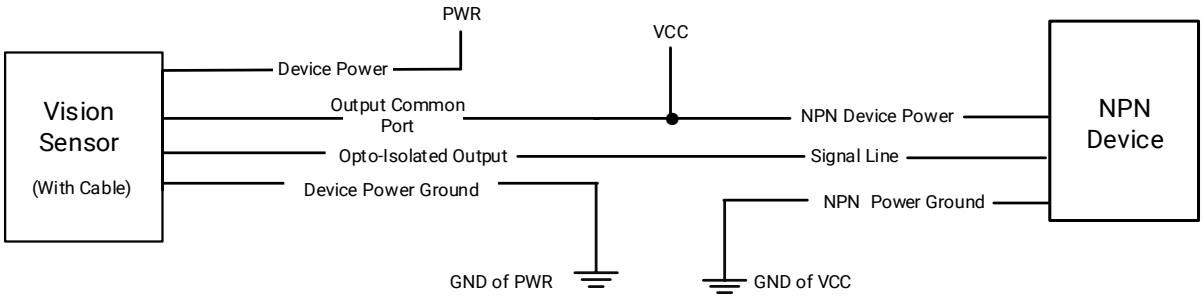

Figure 6-18 Opto-Isolated Output Signal Connecting to NPN Device without Pull-Up Resistor

For opto-isolated output, if the VCC of NPN device is 12 VDC or 24 VDC and 1 KΩ pull-up resistor is used, its wiring is as follows.

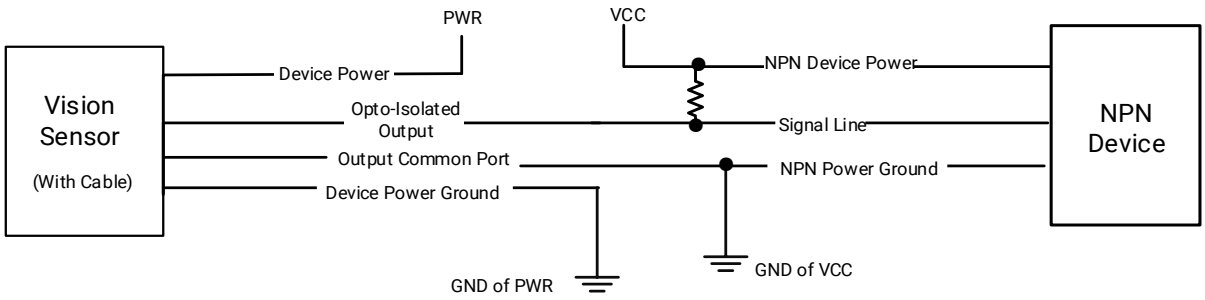

Figure 6-19 Opto-Isolated Output Signal Connecting to NPN Device with Pull-Up Resistor

6.4 RS-232 Serial Port

The device supports outputting via the RS-232 serial port from the 6-pin connector or 10-pin connector. You can refer to the table below for the specific pin name and function.

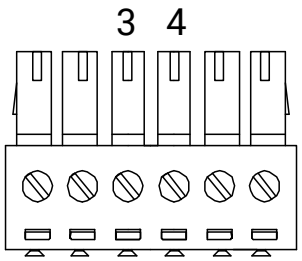

Figure 6-20 6-Pin Terminal Block

Table 6-6 Definition of 6-Pin Terminal Block

Pin No.	Name	Function
3	TX	Transmit Data
4	RX	Receive Data

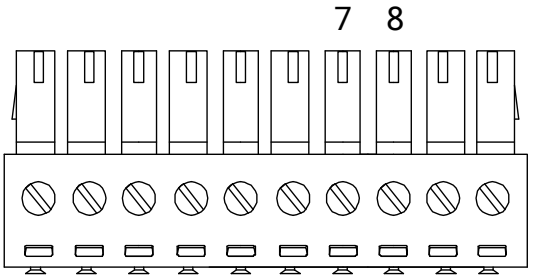

Figure 6-21 10-Pin Terminal Block

Table 6-7 Definition of 10-Pin Terminal Block

Pin No.	Name	Function
7	TX	Transmit Data
8	RX	Receive Data

Chapter 7 Device Connection

Before debugging the device, you need to set the PC's network, install the client software and log in to the device.

7.1 Set PC Network

To ensure stable image transmission and normal communication between the PC and the device via client software, you need to set the PC network before using the client software.

Steps

Note

For different Windows versions, the specific setting path and interface may differ. Please refer to the actual condition.

1. Go to PC network settings page: **Start** → **Control Panel** → **Network and Internet** → **Network and Sharing Center** → **Change adapter settings**.
2. Select NIC and set the IP obtainment mode.

- Select **Obtain an IP address automatically** to get an IP address of the PC automatically.
- Or select **Use the following IP address** to set an IP address for the PC manually.

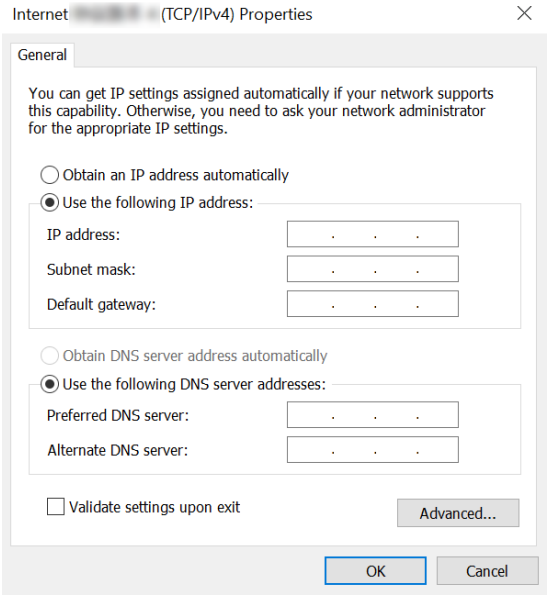

Figure 7-1 Set PC Network

Note

It is recommended to use the static IP address to reduce time for searching the device.

3. Set NIC property.
   1) Go to NIC settings page: **Control Panel** → **Hardware and Sound** → **Device Manager** → **Network Adapter**.
   2) Select corresponding network interface card, and click **Advanced**.
   3) Set **Speed and Duplex** as **Auto-Negotiation** or **100 Mbps**.

7.2 Install Client Software

SCMVS is a client software for device configuration and remote operations.

Note

- Check the Windows version. The client software is compatible with 32/64-bit Windows 7/10 and 64-bit Windows 11.
- You can get the client software installation package from ***https://en.hikrobotics.com/***.
- The graphic user interface may differ by different versions of client software you use.

Steps

1. Double click the installation package to install the client software.
2. Select the language.
3. Read and check **Terms of the License Agreement**.
4. Click **Start Setup**.

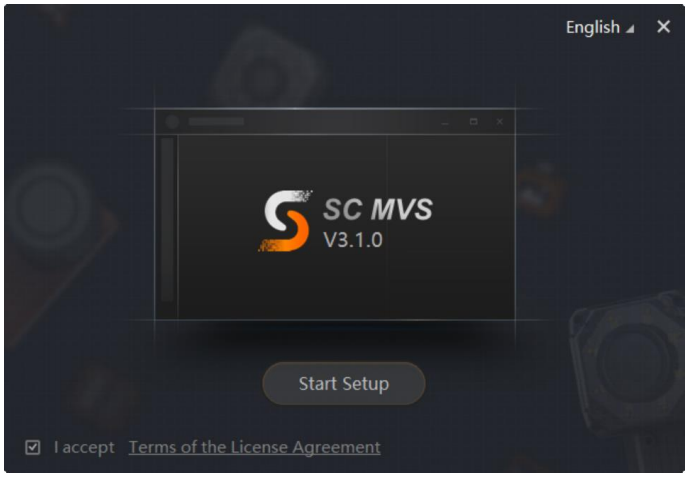

Figure 7-2 Installation Window

5. Select installation directory and click **Next**.

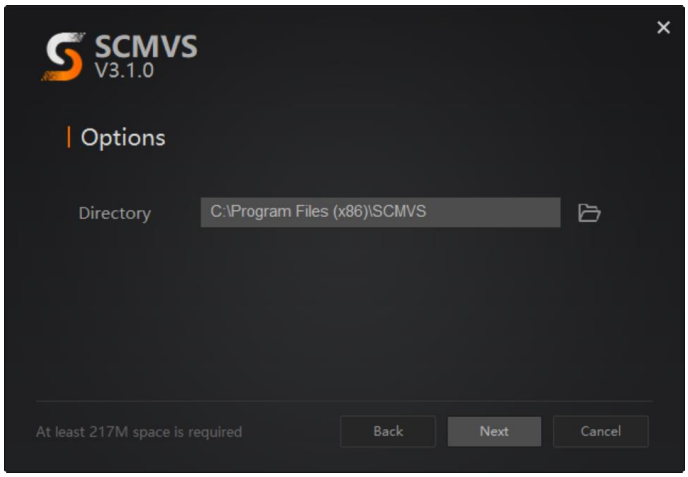

Figure 7-3 Click Next

6. Finish the installation according to the interface prompts.

7.3 Set Device Network

You can set and operate the device in the client software only when the device is in the same network segment with the PC where the client software is installed.

Steps

1. Double click the client software to run it.
2. Click in the device list to find the device, or click to add the device remotely.
3. Right click the device to be connected.
4. Click **Edit IP Address**.
5. Set the IP address of the device in the same network segment with the PC.

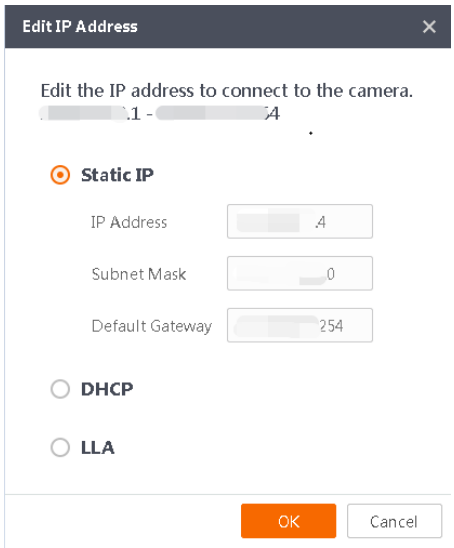

Figure 7-4 Edit IP Address

6. Click **OK**.

7.4 Log In

Note

- Make sure that your device IP address is in the same network segment with the PC where you installed the client software before connecting the device to it.
- The default login password is Abc1234, and it is highly recommended to change the password for the first time use.
- Follow the guidance to find the password if you forget it.
- Refer to the user manual of the SCMVS client software for detailed operation.

Steps

1. Click the device in the device list.
2. Enter password.
3. Click  to log in.



Figure 7-5 Login Window

4. (Optional) Check **Remember me** to remember the password if necessary.

Note

If you forget password, click **Forgot Password** in the login interface to view the device's serial No., and mail it to the technical support personnel or call them to get the corresponding resetting file. After that, import the resetting file and reset the password as the default one.

Chapter 8 Client Layout and Operation Flow

8.1 Main Window Introduction

After logging in to the client software, you can see the main window as shown below.

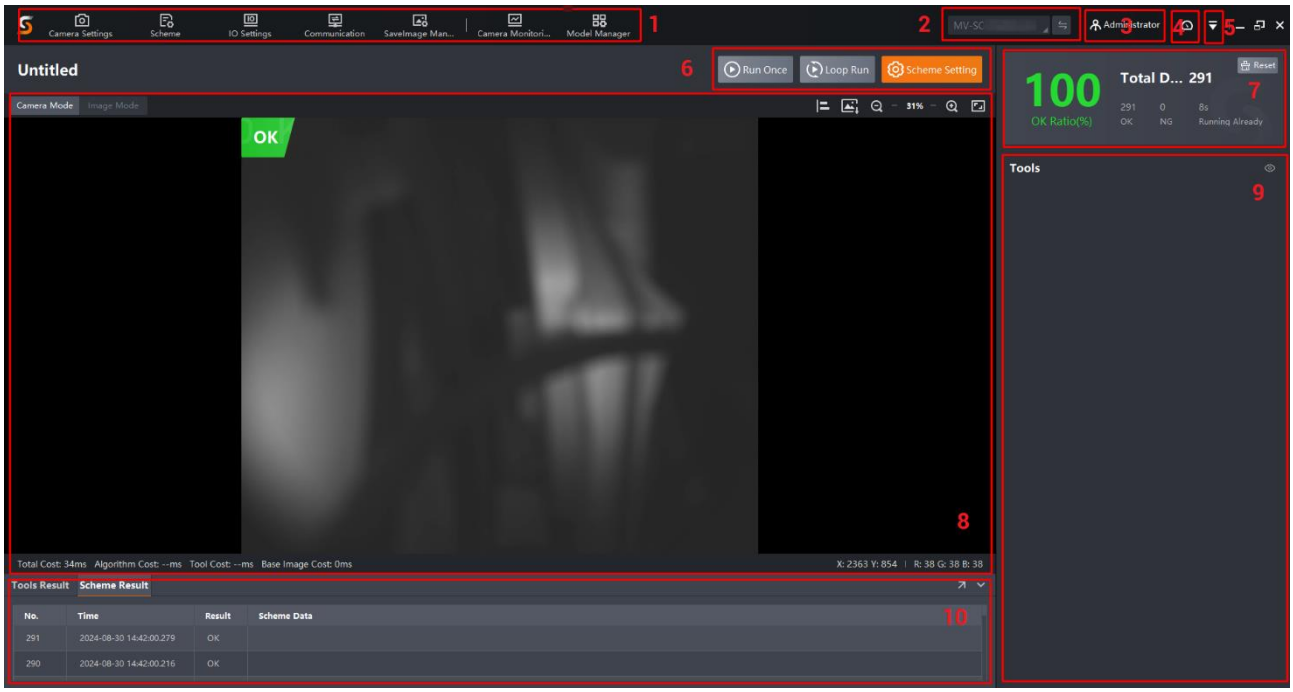

Figure 8-1 Main Window

Note

- The specific interfaces of the client software may differ by its versions.
- The client software loads and runs previous projects after logging in. If there is no project, the client software will create and run a new project.

Table 8-1 Main Window Description

No.	Name	Description
1	Menu Bar	The menu bar includes camera settings, project, IO settings, communication, image saving management, camera monitoring, and model management.
2	Camera List	You can view the current camera model, or switch to other cameras. Up to 9 cameras can be connected.
3	User Role	You can view, switch, and mange roles. The roles include administrator, technical support, maintenance personnel, and

No.	Name	Description
		operator. Different roles have different permissions. The role management is only available for the administrator.
4	Resource Information	You can view the usage of flash, intelligent memory, and CPU. ● Flash usage: It refers to the percentage of total memory being used by the system. ● Intelligent memory usage: It refers to the percentage of total memory being used by the algorithm. ● CPU usage: It refers to the percentage of time that the processor spends executing tasks.
5	Other Areas	You can switch languages, set system parameters, view the user manual, log, and client version information here.
6	Project Management	You can run (once/loop), stop, or edit projects here.
7	Project Status Display Area	This area displays operation status of current projects in real time.
8	Live View Window	This area displays images and results under camera mode and image mode in real time. Under image mode, you can import images into the device.
9	Tool Display Area	This area displays operation results of vision tools loaded in projects in real time. You can edit the specific vision tool.
10	Result Area	This area displays operation results of projects or tools.

8.2 Operation Flow

Note

- Refer to the user manual of the SCMVS client software for detailed parameter settings and operations.
- Click **More** on the upper-right corner of the client software, and click **User Manual** to open.

You can follow the overall operation flow below to operate the device via the client software.

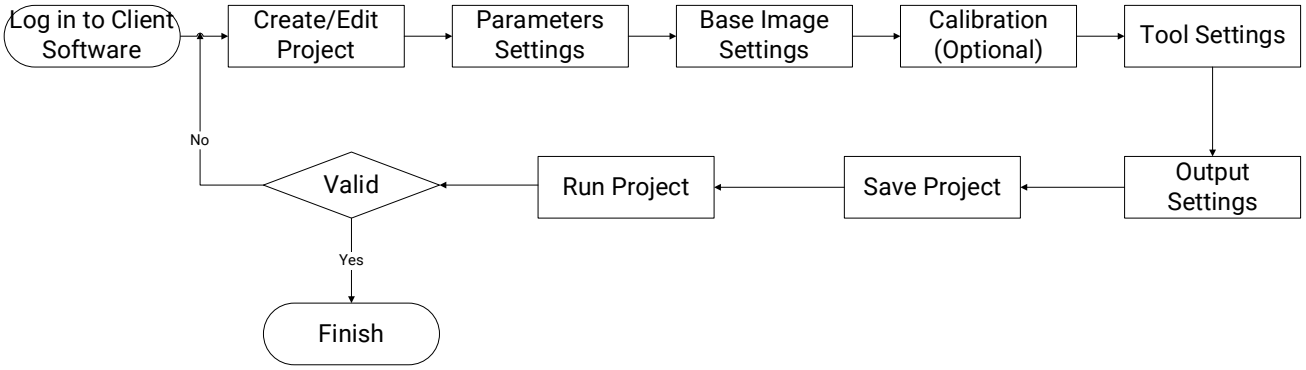

Figure 8-2 Operation Flow

Chapter 9 FAQ (Frequently Asked Question)

9.1 Why there is no device listed after I run the client software?

Table 9-1 Question 1

Possible Cause	Solution
The device is powered off.	Check the device's power connection (observe whether the indicator is unlit or not) to make sure the device is powered up normally.
Network exception.	Check the network connection (the indicator is solid yellow if the network exception occurs) to make sure the device can be connected to the network normally, and make sure that the PC and the device are in the same network segment.

9.2 Why the image is very dark?

Table 9-2 Question 2

Possible Cause	Solution
All black during live view. It may be caused by insufficient brightness of light source.	Increase the brightness of light source appropriately, or change to a brighter one.
Too dark during live view. It may be caused by too small value of exposure and gain.	Increase exposure and gain appropriately.

9.3 Why the image's frame rate is very low in the live view?

Table 9-3 Question 3

Possible Cause	Solution
Network circuitry speed is not 100 Mbps.	Check if the network transit speed is 100 Mbps.

9.4 Why there is no image in the live view?

Table 9-4 Question 4

Possible Cause	Solution
Enabled trigger mode, but there is no trigger signal.	Send the trigger signal to the device, or disable the trigger mode.

HIKROBOT

SHAPE OUR FUTURE INTELLIGENTLY

Hikrobot Co., Ltd.

Tel: 400-989-7998

Website: https://en.hikrobotics.com/

UD48828B