HIKROBOT

MV-SC2004EM

0.4 MP Mono Vision Sensor

With built-in positioning and measurement algorithms, MV-SC2004EM vision sensor can realize counting, existence, measurement detection, and recognition. It can be monitored and operated via the SCMVS client. It can output results via RS-232 and Ethernet, and cooperate with other processes via IO. The vision sensor supports multiple result output methods and customized result text output.



Key Features

- Adopts embedded hardware platform for high-speed image processing.
- Adopts built-in positioning and measurement algorithms to for counting, existence, measurement detection, and recognition.
- Multiple IO interfaces for input and output signals.
- Multiple indicators for displaying device status.
- Adopts light source to ensure uniform brightness in the illuminated area.
- Supports multiple communication protocols, including RS-232, TCP, UDP, FTP, PROFINET, Modbus, Ethernet/IP, etc.

Available Models

- 8 mm focal length: MV-SC2004EM-08S-WBN
- 12.4 mm focal length:MV-SC2004EM-12S-WBN
- 14.8 mm focal length:MV-SC2004EM-15S-WBN

Typical Application

- Consumer electronics
- Food and pharmaceutical
- Automotive

Specification

Model	MV-SC2004EM-08S-WBN	MV-SC2004EM-12S-WBN	MV-SC2004EM-15S-WBN
Tool			
Vision tool	● Measurement: P2P measurement, P2L measurement, contrast measurement, greyscale size, edge width measurement, width measurement, brightness average value, L2L angle, diameter measurement, and line angle ● Existence: Anomaly judge, spot existence, edge existence, contour existence, pattern existence, circle existence, and line existence ● Count: Spot count, edge count, contour count, and pattern count ● Recognition: Category recognition, classification registration, and OCR ● Logic: Calculator, logic judge, condition judge, combination judge, format output, If module, and character comparison ● Location: Fixture		
Solution capacity	Supports solution importing and exporting, up to 8 solutions and 40 modules can be stored.		
Communication protocol	RS-232, TCP, UDP, FTP, PROFINET, Modbus, EtherNet/IP, MELSEC/SLMP, FINS, Keyence KV		
Camera			
Sensor type	CMOS, global shutter		
Pixel size	6.9 μm × 6.9 μm		
Sensor size	1/2.9"		
Resolution	704 × 540		
Max. frame rate	60 fps		
Gain	0 dB to 15 dB		
Exposure time	16 μs to 1 sec		
Pixel format	Mono 8		
Mono/color	Mono		
Electrical feature			
Data interface	Fast Ethernet (100 Mbit/s)		
Digital I/O	17-pin M12 connector provides power, Ethernet, serial port, and digital I/O, including non-isolated input × 1 (Line 2), non-isolated output × 1 (Line 3), configurable non-isolated I/O × 2 (Line 0/1), RS-232 × 1, and external button input × 1 (BUTTON)		
Power supply	12 VDC to 24 VDC		
Power consumption	Avg. 6 W @ 24 VDC Max. 22 W @ 24 VDC		
Mechanical			
Lens mount	M12-mount, adjusting focus manually supported		
Focal length	8 mm	12.4 mm	14.8 mm
Lens cap	Transparent lens cap		
Light source	White LED lamp		
Indicator	Power indicator (PWR), network indicator (LNK), and status indicator (STS)		
Dimension	46 mm × 57.6 mm × 25 mm (1.8" × 2.3" × 1.0")		

Weight	Approx. 220 g (0.5 lb.)
Ingress protection	IP65
Temperature	Working temperature: 0 °C to 50 °C (32 °F to 122 °F) Storage temperature: –30 °C to 70 °C (–22 °F to 158 °F)
Humidity	20% RH to 95% RH (no condensation)
Vibration resistance	Meets standard IEC 60068-2-6:2007. Device only: 10 Hz to 55 Hz, 1.5 mm peak-to-peak amplitude, 2 hours per axis (X, Y, Z)
Shock resistance	Meets standard IEC 60068-2-27:2008. Device only: 30 g / 11 ms, half-sine wave, 500 shocks per axis (6 directions)
General	
Client software	SCMVS
Certification	CE, KC

Dimension

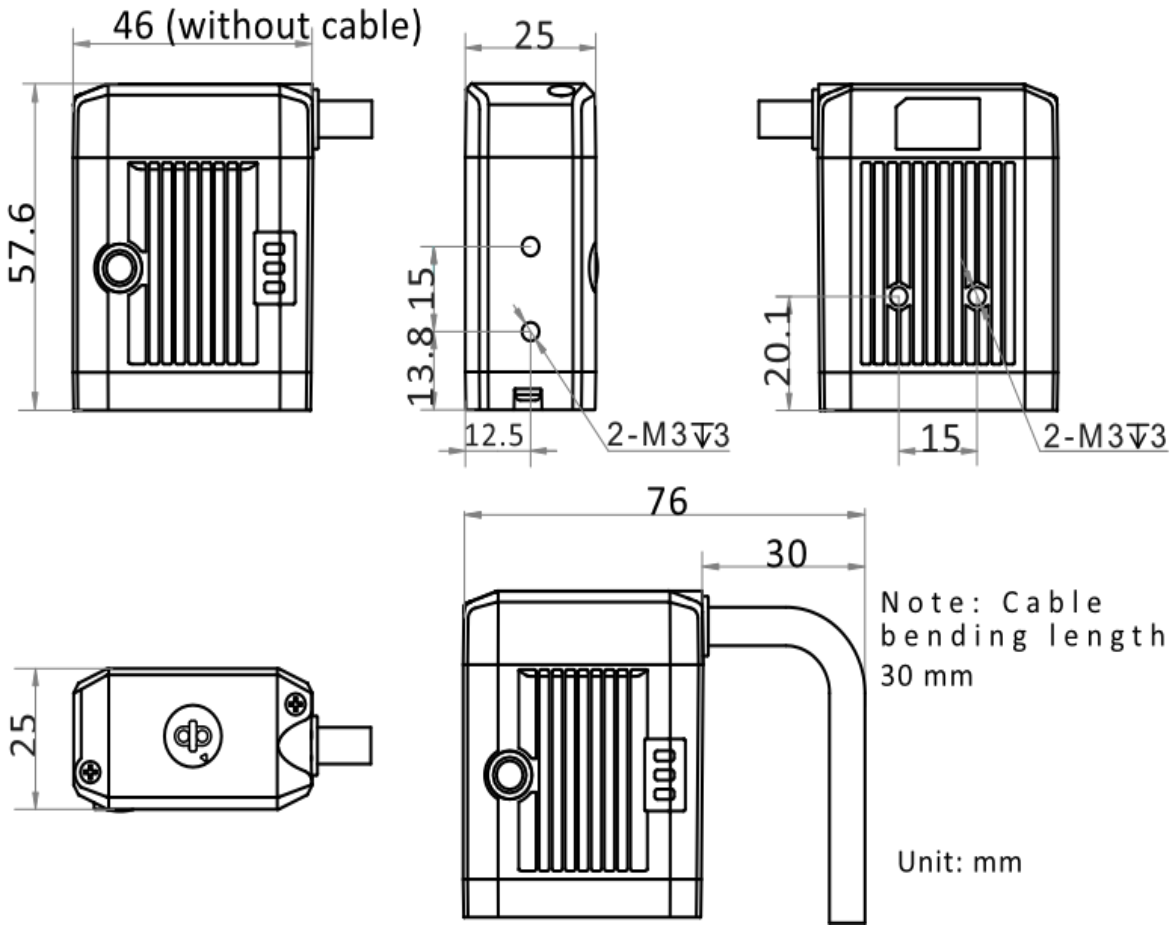

Detection Range

MV-SC2004EM (Unit: mm)					
Lens Focal Length	Working Distance	Field of View		Single Pixel Accuracy	Diagram of Field of View
		H	V		
8	80	48	37	0.07	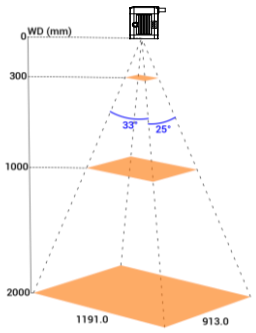
	100	60	46	0.08	
	200	119	91	0.17	
	300	179	137	0.25	
	600	357	274	0.51	
	1000	595	457	0.85	
	2000	1191	913	1.69	
12.4	200	78	60	0.11	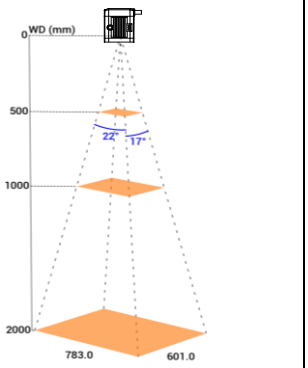
	300	118	90	0.17	
	400	157	120	0.22	
	500	196	150	0.28	
	600	235	180	0.33	
	1000	392	300	0.56	
	2000	783	601	1.11	
14.8	270	89	68	0.13	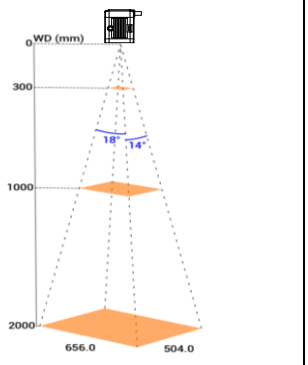
	300	98	76	0.14	
	500	164	126	0.23	
	1000	328	252	0.47	
	1500	492	378	0.70	
	2000	656	504	0.93	

© Hangzhou Hikrobot Co., Ltd. All Rights Reserved.
Hangzhou Hikrobot does not tolerate any infringement. Any organization or individual may not imitate or reproduce in whole or in part of the content. The data herein is based on Hikrobot's internal evaluation. Actual data may vary depending on specific configuration and operating condition. The information herein is subject to change without notice All the content has been checked conscientiously. Nevertheless, Hikrobot shall not be liable to damages resulting from errors, inconsistencies or omissions.