MV-CH650-90XM/XC

65 MP CMOS CoaXPress Area Scan Camera



Introduction

MV-CH650-90XM/XC camera adopts Gpixel GMAX3265 sensor and CXP-6 interface to provide high-quality and non-compressed images in real time. Its max. frame rate reaches up to 31.5 fps in full resolution.

Key Feature

- Resolution of 9344 × 7000, and pixel size of 3.2 μm × 3.2 μm.
- Adopts global shutter CMOS to provide high dynamic range, SNR, and high-quality image.
- Adopts CXP-6 interface to transmit data.
- Compatible with CoaXPress Protocol and GenICam Standard.

Dimension

F-mount with fan:

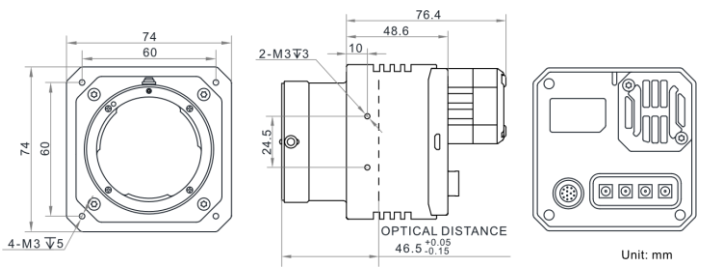

Available Model

- M58-mount with fan, mono: MV-CH650-90XM-M58S-NF
- F-mount with fan, mono: MV-CH650-90XM-F-NF
- M58-mount with fan, color: MV-CH650-90XC-M58S-NF
- F-mount with fan, color: MV-CH650-90XC-F-NF

Applicable Industry

PCB AOI, FPD, high-accuracy measurement, etc.

Sensor Quantum Efficiency

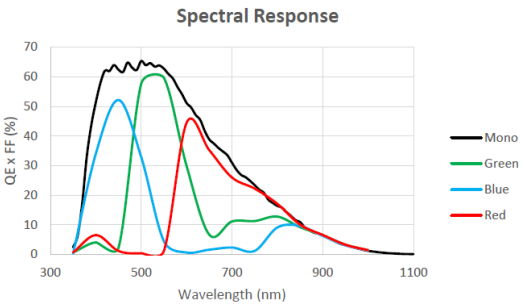

M58-mount with fan:

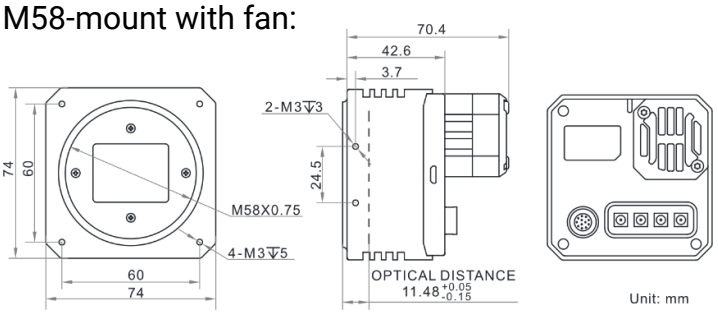

Specification

Model	MV-CH650-90XM	MV-CH650-90XC
Camera		
Sensor type	CMOS, global shutter	
Sensor model	Gpixel GMAX3265	
Pixel size	3.2 μm × 3.2 μm	
Sensor size	29.9 mm × 22.4 mm	
Resolution	9344 × 7000	
Max. frame rate	31.5 fps @ 9216 × 7000	31.5 fps @ 9344 × 7000
Dynamic range	66 dB	
SNR	40 dB	
Gain	1.25x to 6x	
Exposure time	14 μs to 10 sec	
Exposure mode	Off/Once/Continuous exposure mode	
Mono/color	Mono	Color
Pixel format	Mono 8/10/12	Bayer BG 8/10/12
Binning	Supports 1 ×1, 1 × 2, 1 × 4, 2 × 1, 2 × 2, 2 × 4, 4 × 1, 4 × 2, 4 × 4	
Decimation	Supports 1 ×1, 1 × 2, 1 × 4, 2 × 1, 2 × 2, 2 × 4, 4 × 1, 4 × 2, 4 × 4	
Reverse image	Supports horizontal and vertical reverse image output	
Electrical features		
Data interface	CoaXPress with DIN interface	
Digital I/O	12-pin P10 connector provides I/O: opto-isolated input × 1 (Line 0), opto-isolated output × 1 (Line 1), bi-directional non-isolated I/O × 1 (Line 2), and RS-232 × 1.	
Power supply	9 VDC to 24 VDC, CXP-0 and CXP-1 connectors support PoCXP	
Power consumption	Typ. 10.5 W @ 24 VDC	Typ. 10.2 W @ 24 VDC
Mechanical		
Lens mount	M58*0.75, flange back length 11.48 mm F-mount, flange back length 46.5 mm	
Dimension	M58-mount with fan: 74 mm × 74 mm × 70.4 mm (2.9" × 2.9" × 2.8") F-mount with fan: 74 mm × 74 mm × 76.4 mm (2.9" × 2.9" × 3.0")	
Weight	M58-mount with fan: approx. 470 g (1.0 lb.) F-mount with fan: approx. 500 g (1.1 lb.)	
Ingress protection	IP40 (under proper lens installation and wiring)	
Temperature	Working temperature: 0 °C to 50 °C (32 °F to 122 °F) Storage temperature: –30 °C to 70 °C (–22 °F to 158 °F)	
Humidity	20% RH to 95% RH (no condensation)	
General		
Client software	Frame grabber software meeting with CoaXPress Protocol	
Operating system	32/64-bit Windows 7/10, 64-bit Windows 11 with 8 GB memory or above	
Compatibility	CoaXPress, GenICam	
Certifications	CE, RoHS, KC	

Hangzhou Hikrobot Co. Ltd.
en.hikrobotics.com

© Hangzhou Hikrobot Co., Ltd. All Rights Reserved.
Hangzhou Hikrobot does not tolerate any infringement. Any organization or individual may not imitate or reproduce in whole or in part of the content. The data herein is based on Hikrobot's internal evaluation. Actual data may vary depending on specific configuration and operating condition. The information herein is subject to change without notice All the content has been checked conscientiously. Nevertheless, Hikrobot shall not be liable to damages resulting from errors, inconsistencies or omissions.