HIKROBOT

MV-SC3050XM

5 MP Mono Vision Sensor

With built-in high-precision vision algorithms, MV-SC3050XM vision sensor can realize counting, existence, measurement, recognition and other functions. It can be easily configured and operated via the SCMVS client software, and it uses RS-232 and Ethernet to output vision tool results and customized results.



Key Features

- Adopts embedded hardware platform to realize high-speed image processing.
- Built-in high-precision positioning, measurement and recognition algorithms for counting, defects, existence, positioning and other functions.
- Supports RS-232, TCP, UDP, FTP, Modbus, PROFINET, EtherNet/IP and other communication modes.
- Adopts multiple IO interfaces for input and output signals.
- Supports viewing the device's status in real time via 360° visual indicator, convenient for debugging and maintenance.
- Rotatable cable tail design, suitable for narrow space.
- Adopts polarized, diffuser, and full-transparent multiple optical lighting with good environmental adaptability.
- IP67 protection without fear of harsh industrial application environments.

Typical Application

- Consumer electronics
- Food and pharmaceutical
- Automobile

Specification

Model	MV-SC3050XM-**M-WBN	MV-SC3050XM-**L-WBN[1]
Tool		
Vision tool	● Measurement tools: P2P measurement, P2L measurement, contrast measurement, grayscale size, edge width measurement, width measurement, brightness average value, L2L angle, diameter measurement, line angle	
	● Existence tools: Spot existence, edge existence, contour existence, pattern existence, circle existence, line existence, anomaly judge, existence detection	
	● Count tools: Multi-object count, spot count, edge count, contour count, pattern count, learning-based count, count[2]	
	● Recognition tools: Code recognition, category recognition, classification registration, object registration, OCR, learning-based OCR	
	● Logic tools: Calculator, if module, logic judge, format output, condition judge, character comparison, combination judge	
	● Location tools: Calibration convert, single point alignment, point rectify, point grasp, scale transformation, fixture	
	● Deep learning tools: DL classification, DL object detection	
	● Defect detection tools: Anomaly detection, golden sample learning, character horizontal stripe detection	
	● Industry tool: OCR and defect detection	
Solution capacity	Supports importing and exporting project, up to 32 projects can be stored.	Supports importing and exporting solutions, up to 32 solutions can be stored. With TF card inserted, up to 128 solutions can be stored.
Communication protocol	RS-232, TCP, UDP, FTP, PROFINET, Modbus, EtherNet/IP, MELSEC/SLMP, FINS, Keyence KV	
Camera		
Sensor type	CMOS, global shutter	
Pixel size	3.45 μm × 3.45 μm	
Sensor size	1/1.45"	
Resolution	2432 × 2048	
Max. frame rate	40 fps	
Gain	0 dB to 15 dB	
Exposure time	6 μs to 1 sec	35 μs to 1 sec
Pixel format	Mono 8	
Mono/color	Mono	
Electrical feature		
Data interface	Fast Ethernet (100 Mbit/s)	
Digital I/O	12-pin M12 connector provides power and I/O, including opto-isolated input (LINE 0/1/2) × 3, opto-isolated output (LINE 3/4/5) × 3, and RS-232 × 1 Supports triggering device via pressing top trigger button	
Power supply	24 VDC	
Power consumption	Avg. 7 W @ 24 VDC (light source enabled) Max. 22 W @ 24 VDC (light source enabled)	Avg.: 6.5 W @ 24 VDC (light source enabled) Max.: 22 W @ 24 VDC (light source enabled)
Mechanical		
Lens mount	M12-mount, mechanical autofocus supported	D14-mount, liquid lens focus supported

Focal length	8 mm/12 mm/16 mm	
Lens cap	Polarized + diffuser + full-transparent lens cap	Polarized + full-transparent lens cap
Light source	White spot light by default. Red/blue/IR light source is optional	
Aiming system	1 LED	
Indicator	360° visual indicator	
Dimension	Straight angle: 80.1 mm × 43 mm × 44.3 mm (3.2" × 1.7" × 1.7") Right angle: 58.5 mm × 43 mm × 65.4 mm (2.3" × 1.7" × 2.6")	Straight angle: 80.1 mm × 43 mm × 44.3 mm (3.2" × 1.7" × 1.7") Right angle: 61.8 mm × 43 mm × 64.6 mm (2.4" × 1.7" × 2.5")
Weight	Approx. 190 g (0.4 lb.)	
Ingress protection	IP67 (under proper installation of waterproof lens cap)	
Temperature	Working temperature: 0 °C to 50 °C (32 °F to 122 °F) Storage temperature: –30 °C to 70 °C (–22 °F to 158 °F)	Working temperature: 0 °C to 40 °C (32 °F to 104°F) Storage temperature: –30 °C to 70 °C (–22 °F to 158 °F)
Humidity	20% RH to 95% RH (no condensation)	
Vibration resistance	Meets standard IEC 60068-2-6:2007. Device only (without installation bracket): 10 Hz to 55 Hz, 1.5 mm peak-to-peak amplitude, 2 hours per axis (X, Y, Z)	
Shock resistance	Meets standard IEC 60068-2-27:2008. Device only (without installation bracket): 30 g / 11 ms, half-sine wave, 500 shocks per axis (6 directions)	
General		
Client software	SCMVS	
Certification	CE, KC	

[1]The appearance varies with mechanical focusing models and liquid lens focusing models, and the actual condition shall prevail.

[2]Count refers to dynamic counting that predicts the target trajectory based on position and velocity.

Available Models

Mechanical Focusing

- 8 mm focal length: MV-SC3050XM-08M-WBN
- 12 mm focal length: MV-SC3050XM-12M-WBN
- 16 mm focal length: MV-SC3050XM-16M-WBN

Liquid Lens Focusing

- 8 mm focal length: MV-SC3050XM-08L-WBN
- 12 mm focal length: MV-SC3050XM-12L-WBN
- 16 mm focal length: MV-SC3050XM-16L-WBN

Detection Range

MV-SC3050XM-**M-*** (Unit: mm)					
Lens Focal Length	Working Distance	Field of View		Single Pixel Accuracy	Diagram of Field of View
		H	V		
8	30	31	26	0.01	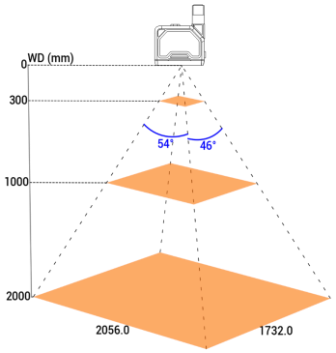
	100	103	87	0.04	
	200	206	173	0.08	
	300	308	260	0.13	
	600	617	520	0.25	
	1000	1028	866	0.42	
	2000	2056	1732	0.85	
12	60	42	35	0.02	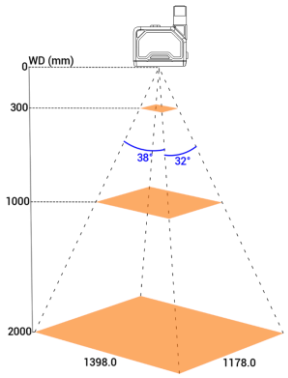
	100	70	59	0.03	
	200	140	118	0.06	
	300	210	177	0.09	
	600	420	353	0.17	
	1000	699	589	0.29	
	2000	1398	1178	0.58	
16	110	58	49	0.02	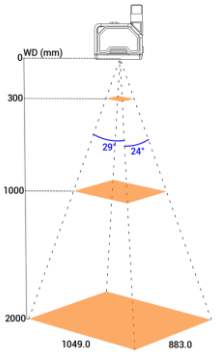
	200	105	88	0.04	
	300	157	132	0.06	
	600	315	265	0.13	
	1000	524	442	0.22	
	2000	1049	883	0.43	

MV-SC3050XM-**L-*** (Unit: mm)					
Lens Focal Length	Working Distance	Field of View		Single Pixel Accuracy	Diagram of Field of View
		H	V		
8	50	52	44	0.02	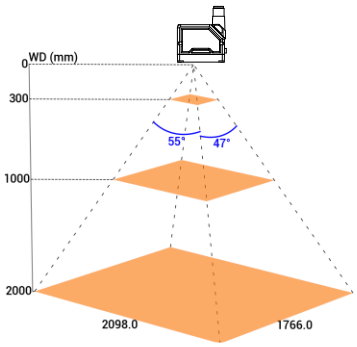
	100	105	88	0.04	
	300	315	265	0.13	
	600	629	530	0.26	
	1000	1049	883	0.43	
	1500	1573	1325	0.65	
	2000	2098	1766	0.86	
12	80	56	47	0.02	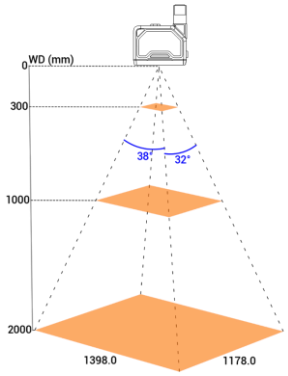
	100	70	59	0.03	
	300	210	177	0.09	
	600	420	353	0.17	
	1000	699	589	0.29	
	1500	1049	883	0.43	
	2000	1398	1178	0.58	
16	100	52	44	0.02	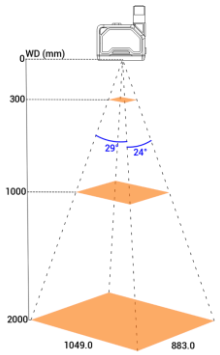
	200	105	88	0.04	
	300	157	132	0.06	
	600	315	265	0.13	
	1000	524	442	0.22	
	1500	787	662	0.32	
	2000	1049	883	0.43	

Note: For liquid lens models, the minimum working distance in Fast Focus (ToF autofocus) mode is 100 mm.

Dimension

MV-SC3050XC-M-*****

Device (Straight Angle):

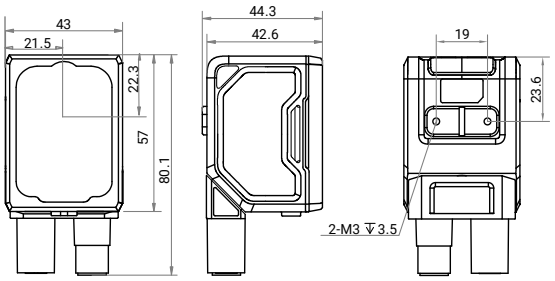

Unit: mm

Device (Right Angle):

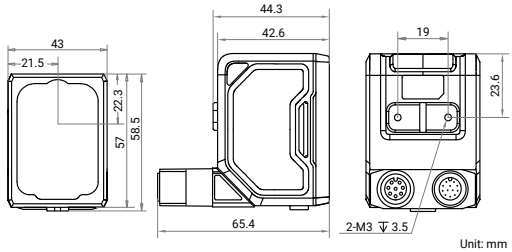

Unit: mm

Device and Installation Bracket (Straight Angle):

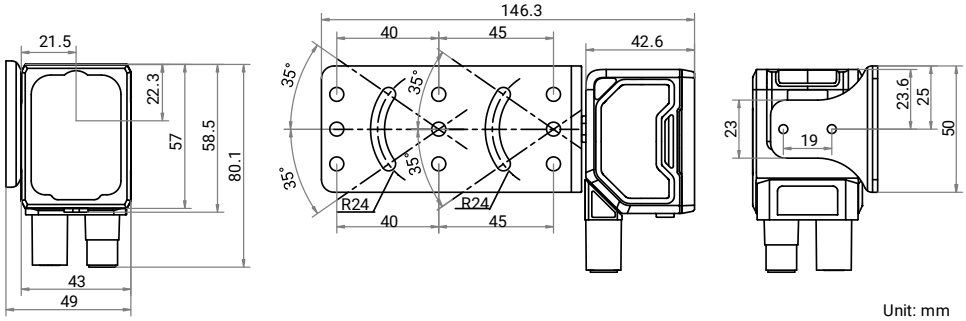

Unit: mm

Device and Installation Bracket (Right Angle):

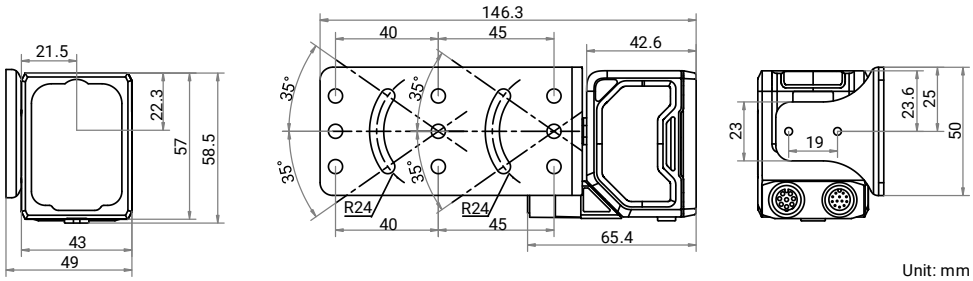

Unit: mm

Installation Bracket:

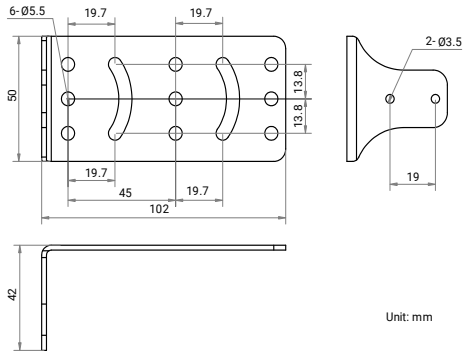

Unit: mm

Dimension

MV-SC3050XC-L-*****

Device (Straight Angle):

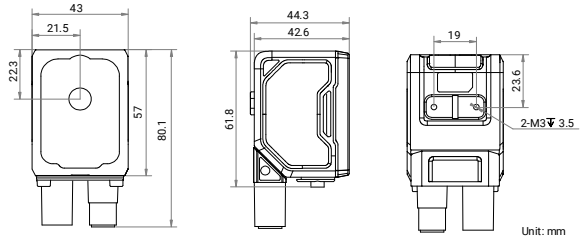

Unit: mm

Device (Right Angle):

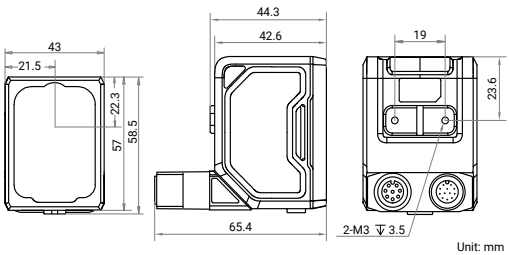

Unit: mm

Device and Installation Bracket (Straight Angle):

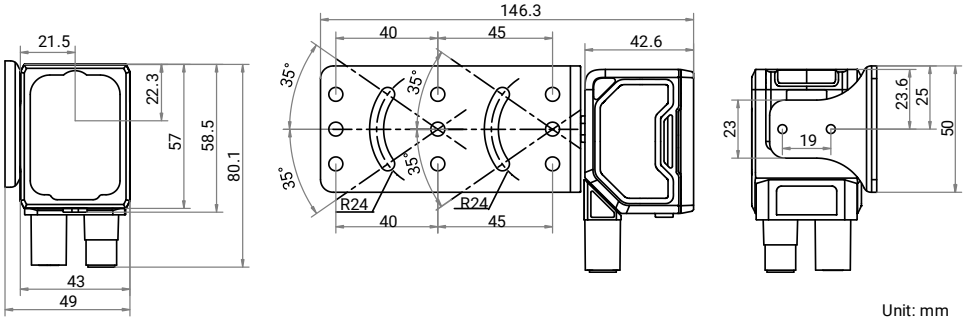

Unit: mm

Device and Installation Bracket (Right Angle):

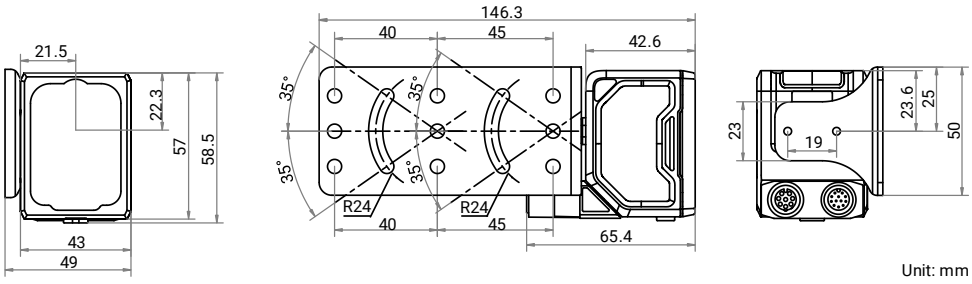

Unit: mm

Installation Bracket:

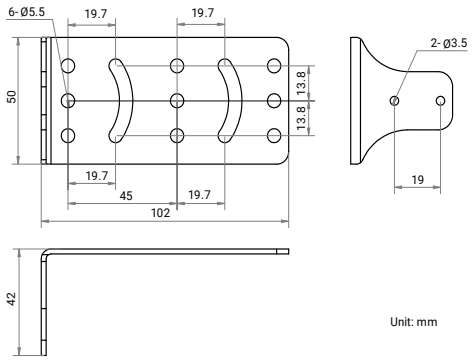

Unit: mm

Hangzhou Hikrobot Co. Ltd.
en.hikrobotics.com

© Hangzhou Hikrobot Co., Ltd. All Rights Reserved.
Hangzhou Hikrobot does not tolerate any infringement. Any organization or individual may not imitate or reproduce in whole or in part of the content. The data herein is based on Hikrobot's internal evaluation. Actual data may vary depending on specific configuration and operating condition. The information herein is subject to change without notice All the content has been checked conscientiously. Nevertheless, Hikrobot shall not be liable to damages resulting from errors, inconsistencies or omissions.