HIKROBOT

MV-SC3016C

1.6 MP Color Vision Sensor

With built-in positioning and measurement algorithms, MV-SC3016C vision sensor can detect object's existence, quantity, location, etc. It can be monitored and operated via the SCMVS client. It can output results via RS-232 and Ethernet, and cooperate with other processes via IO. The vision sensor supports multiple result output methods and customized result text output.



Key Features

- Adopts embedded hardware platform for high-speed image processing.
- Adopts built-in positioning and measurement algorithms to detect object's existence, quantity, location, etc.
- Multiple IO interfaces for input and output signals.
- Multiple indicators for displaying device status.
- Adopts light source to ensure uniform brightness in the illuminated area.
- Supports multiple communication protocols, including RS-232, TCP, UDP, FTP, PROFINET, Modbus, and EtherNet/IP.

Available Models

- 6 mm focal length: MV-SC3016C-06M-WBN
- 12 mm focal length: MV-SC3016C-12M-WBN
- 14.8 mm focal length: MV-SC3016C-15M-WBN

Typical Application

- Consumer electronics
- Food and medical industry
- Automobile

Specification

Model	MV-SC3016C-06M-WBN	MV-SC3016C-12M-WBN	MV-SC3016C-15M-WBN
Tool			
Vision tool	● Measurement tools: P2P measurement, P2L measurement, contrast measurement, grayscale size, edge width measurement, width measurement, brightness average value, L2L angle, color measurement, color size, diameter measurement, line angle		
	● Existence tools: Spot existence, edge existence, contour existence, pattern existence, circle existence, line existence, anomaly judge, existence detection		
	● Count tools: Multi-object count, spot count, edge count, contour count, pattern count, learning-based count, color count, count[1]		
	● Recognition tools: Code recognition, category recognition, classification registration, object registration, OCR, learning-based OCR		
	● Logic tools: Calculator, if module, logic judge, format output, condition judge, character comparison, combination judge		
	● Location tools: Calibration convert, single point alignment, point rectify, point grasp, scale transformation, fixture		
	● Deep learning tools: DL classification, DL object detection		
	● Defect detection tools: Anomaly detection, golden sample learning, character horizontal stripe detection		
	● Industry tool: OCR and defect detection		
Solution capacity	Supports importing and exporting project, up to 32 projects can be stored		
Communication protocol	RS-232, TCP, UDP, FTP, PROFINET, Modbus, EtherNet/IP, MELSEC/SLMP, FINS, Keyence KV		
Camera			
Sensor type	CMOS, global shutter		
Pixel size	3.45 μm × 3.45 μm		
Sensor size	1/2.9"		
Resolution	1408 × 1024		
Max. frame rate	60 fps		
Gain	0 dB to 15 dB		
Exposure time	35 μs to 1 sec		
Pixel format	RGB 8, Mono 8		
Mono/color	Color		
Electrical feature			
Data interface	Fast Ethernet (100 Mbit/s)		
Digital I/O	17-pin M12 connector provides power, Ethernet, digital I/O, and serial port: Input signal × 2 (Line 0/1), output signal × 3 (Line 5/6/7), bi-directional I/O × 3 (Line 2/3/4), and external button input × 1. Output signal can be set as NPN or PNP.		
Power supply	24 VDC		
Power consumption	Avg.: 13.8 W @ 24 VDC (light source enabled) Max.: 42 W @ 24 VDC (light source enabled)		
Mechanical			
Lens mount	M12-mount, mechanical focus supported		
Focal length	6 mm	12 mm	14.8 mm
Lens cap	Transparent lens cap by default. Half-polarized or fully-polarized lens cap is optional.		

Light source	14 LEDs, white light by default. Red, blue or IR is optional.
Indicator	Power indicator (PWR), network indicator (LNK), status indicator (STS), result indicator (OK/NG)
Dimension	65.2 mm × 65.2 mm × 47 mm (2.6" × 2.6" × 1.9")
Weight	Approx. 280 g (0.6 lb.)
Ingress protection	IP67 (under proper installation of lens and wiring)
Temperature	Working temperature: 0 °C to 50 °C (32 °F to 122 °F) Storage temperature: –30 °C to 70 °C (–22 °F to 158 °F)
Humidity	20% RH to 95% RH (no condensation)
Vibration resistance	Meets standard IEC 60068-2-6:2007. Device only (without installation bracket): 10 Hz to 55 Hz, 1.5 mm peak-to-peak amplitude, 2 hours per axis (X, Y, Z)
Shock resistance	Meets standard IEC 60068-2-27:2008. Device only (without installation bracket): 30 g / 11 ms, half-sine wave, 500 shocks per axis (6 directions)
General	
Client software	SCMVS
Certification	CE, KC

[1]Count refers to dynamic counting that predicts the target trajectory based on position and velocity.

Dimension

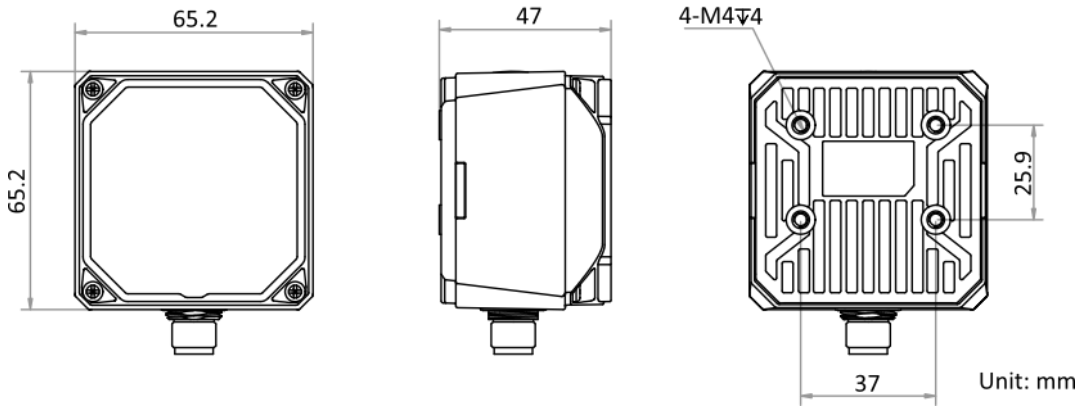

Detection Range

MV-SC3016C (Unit: mm)					
Lens Focal Length	Working Distance	Field of View		Single Pixel Accuracy	Diagram of Field of View
		H	V		
6	30	24	18	0.02	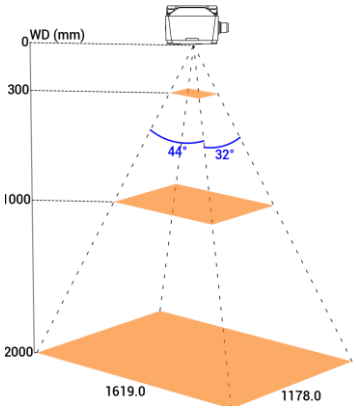
	100	81	59	0.06	
	200	162	118	0.12	
	300	243	177	0.17	
	600	486	353	0.35	
	1000	810	589	0.58	
	2000	1619	1178	1.15	
12	60	24	18	0.02	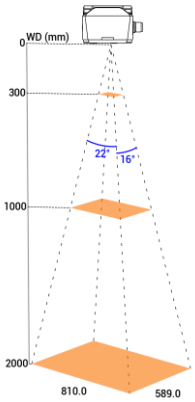
	100	40	29	0.03	
	200	81	59	0.06	
	300	121	88	0.09	
	600	243	177	0.17	
	1000	405	294	0.29	
	2000	810	589	0.58	
14.8	110	36	26	0.03	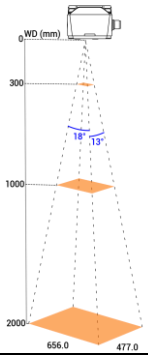
	200	66	48	0.05	
	300	98	72	0.07	
	600	197	143	0.14	
	1000	328	239	0.23	
	2000	656	477	0.47	

Hangzhou Hikrobot Co. Ltd.
en.hikrobotics.com

© Hangzhou Hikrobot Co., Ltd. All Rights Reserved.
Hangzhou Hikrobot does not tolerate any infringement. Any organization or individual may not imitate or reproduce in whole or in part of the content. The data herein is based on Hikrobot's internal evaluation. Actual data may vary depending on specific configuration and operating condition. The information herein is subject to change without notice All the content has been checked conscientiously. Nevertheless, Hikrobot shall not be liable to damages resulting from errors, inconsistencies or omissions.